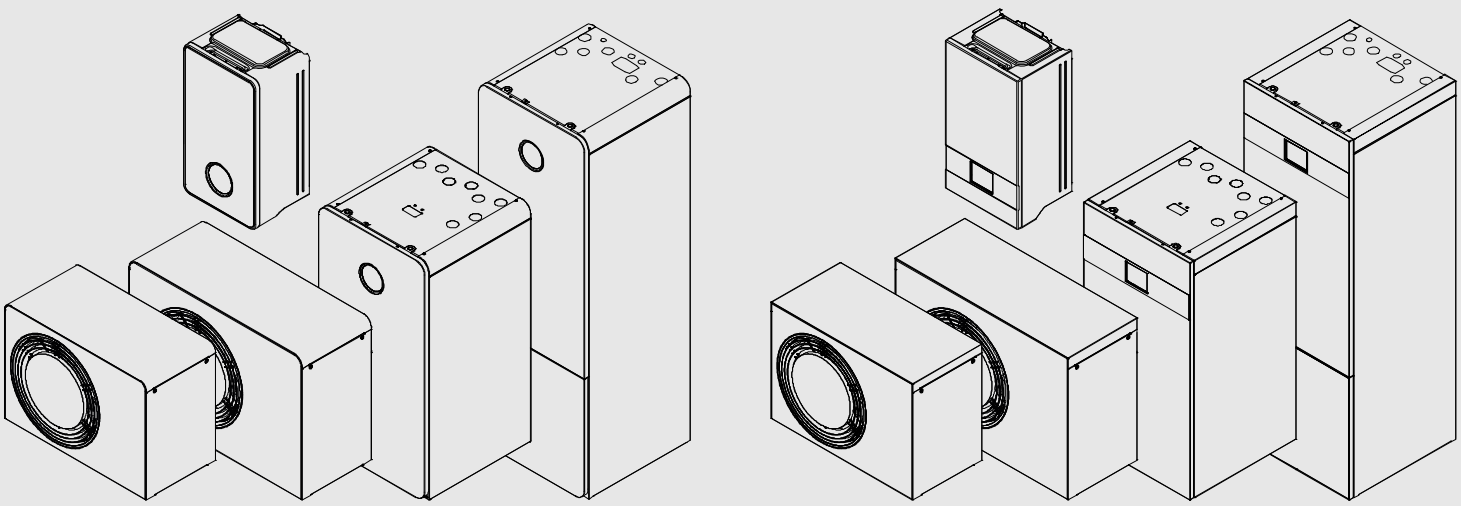

AW semi monobloc

Compress 5800i/6800i AW
Logatherm WLW176i/186i
AirX 500

Service Manual

6721864461 (2024-11-01)

SOLARPLAZA Solarsystemen und Wärmepumpen

BOSCH Compress 5800i AW12 OR-T ·erhältlich bei solarplaza.at

About the Service Manual

The service manual is subject to continuous updates and is therefore not distributed in printed form. When important additions or changes are made, a new version is uploaded to our document archive online. Markets within the Bosch organization can download the most recent version via the product page on the Docupedia site HC Technical Support & Training.

Table of Contents

1 Product overview 4
2 Requirements for service and maintenance 5
2.1 Training requirements and necessary certificates for technicians 5
2.2 Safety precautions 6
3 System overview 9
3.1 Principle sketch ODU 9
3.2 Principle sketch IDU 10
3.2.1 Floor standing IDU (AWM, T180, AirModule) 10
3.2.2 Wall hung IDU (AWE, E, AirBox) 11
3.2.3 Floor standing IDU (AWMB, TP70, AirModule B) 12
4 Component technical data 13
4.1 ODU 13
4.1.1 Temperature sensors 13
4.1.2 Compressor [ER1] 14
4.1.3 Inverter 14
4.1.4 Fan [PL3] 14
4.1.5 Low pressure sensor [JR0] 15
4.1.6 High pressure sensor [JR1] 15
4.1.7 High pressure switch [MR1] 15
4.1.8 Drip tray heater [EA0] 16
4.1.9 Electronic expansion valve [VR0] and [VR1] 16
4.1.10 4-way valve [VR4] 16
4.2 IDU 17
4.2.1 Temperature sensors 17
4.2.2 Circulation pump [PC0 and PC1] 18
5 Control unit 19
5.1 Access level for installer 19
5.2 Quick start 19
5.3 Activation of operation with only additional heater 19
6 Troubleshooting 20
6.1 Alarm list 20
6.2 Function test of heat pump 70
7 Work instructions ODU 71
7.1 Covers removal 72
7.2 Interventions in refrigerant circuit 73
7.2.1 Refrigerant box service access 74
7.2.2 Material 76
7.2.3 Evacuation/filling of refrigerant 76
7.2.4 Filter dryer installation 77
7.2.5 Evacuate to vacuum before filling the refrigerant 78
7.2.6 Filling amount 78
7.3 Compressor [ER1] replacement 79
7.4 4-way valve [VR4] replacement 85
7.5 Evaporator [EL1] replacement 86
7.6 Fan [PL3] replacement 90
7.7 Drip tray heater [EA0] replacement 91

SOLAR PLAZA
Solarsystemen und Wärmepumpen

BOSCH Compress 5800i AW12 OR-T ·erhältlich bei solarplaza.at

8 Work instructions IDU floor standing (AWM, T180, AirModule) 95
8.1 Software loading 95
8.2 Filling hydraulic system procedure 95
8.3 Circulation pump replacement 96
8.3.1 How to reassign role of circulation pump address 97
8.4 Manual de-airing 97
8.5 DHW tank replacement 98
8.6 Electrical heater [EE] replacement 99
8.7 Temperature sensor [TC1] replacement 100
8.8 3-way valve [VW1] replacement 101
9 Work instructions IDU wall hung (AWE, E, AirBox) 102
9.1 Software loading 102
9.2 Filling procedure hydraulic system 102
9.3 Circulation pump replacement 103
9.4 Manual de-airing 103
9.5 Electrical heater [EE] replacement 103
9.6 Temperature sensor [TC1] replacement 103
9.7 3-way valve [VW1] replacement 103
10 Work instructions IDU floor standing (AWMB, TP70, AirModule B) 104
10.1 Software loading 104
10.2 Filling procedure hydraulic system 104
10.3 Circulation pump replacement 105
10.4 Manual de-airing 105
10.5 Electrical heater [EE] replacement 105
10.6 Temperature sensor [TC1] replacement 106
10.7 3-way valve [VW1] replacement 106
10.8 Control board [XCU-SEH] replacement 107

SOLAR PLAZA
Solarsystemen und Wärmepumpen

BOSCH Compress 5800i AW12 OR-T ·erhältlich bei solarplaza.at

1 Product overview

		Bosch	Buderus	IVT
Models	***Family***	*Compress 5800i AW* *Compress 6800i AW*	*Logatherm WLW176i* *Logatherm WLW186i*	*AirX 500*
	ODU	AW OR-S AW OR-T	WLW MB AR	AirX 500
	IDU floor standing with integrated DHW cylinder, electrical heater and micro buffer cylinder	CS5800iAW 12 M CS6800iAW 12 M	WLW176i-12 T180 WLW186i-12 T180	AirModule 500
	IDU wall hung with integrated electrical heater	CS5800iAW 12 E CS6800iAW 12 E	WLW176i-12 E WLW186i-12 E	AirBox 500
	IDU floor standing with integrated buffer cylinder and electrical heater	CS5800iAW 12 MB CS6800iAW 12 MB	WLW176i-12 TP70 WLW186i-12 TP70	AirModule B 500

ODU Outdoor unit / heat pump
IDU Indoor unit

SOLAR PLAZA
Solarsystemen und Wärmepumpen

BOSCH Compress 5800i AW12 OR-T ·erhältlich bei solarplaza.at

2 Requirements for service and maintenance

WARNING! This product contains the flammable refrigerant R290. If a leak occurs, the refrigerant may form a combustible gas due to mixing with air. There is a risk of fire and explosion.

All training requirements, instructions and safety precautions mentioned in this manual must be followed. Failure to comply with this may result in material damage as well as personal injury, including danger to life.

Observe that this manual is intended for **outdoor-placed heat pump models only** (i.e. the heat pump unit with refrigerant circuit is installed outdoors). Indoor-installed heat pumps may require additional safety measures!

2.1 Training requirements and necessary certificates for technicians

Service and maintenance must only be carried out by qualified technicians that possess the necessary competence for handling this product and are aware about the properties and risks associated with the highly flammable refrigerant R290.

All technicians must be properly trained and receive necessary information about*:

- The explosion potential of flammable refrigerants.
- Potential ignition sources.
- Relevant safety concepts.
- Refrigerant detectors.
- Sealed components and sealed enclosures.
- Correct working procedures.

* Minimum content to be covered by Bosch in product trainings, further content to be covered in separate/external trainings about flammable refrigerants (this training is mandatory for refrigerant technicians).

The following requirements for training and certificates have been defined.

Training requirements and necessary certificates

- To replace components in the refrigerant circuit, the technician:
  - must possess a valid refrigerant certificate;
  - must have attended a training in flammable refrigerants;
  - must possess a certificate from Bosch product training for this product.
- To replace other components (outside of the refrigerant circuit) and perform general fault finding, the technician:
  - should have attended a training in flammable refrigerants;
  - must possess a certificate from Bosch product training for this product.
- To replace components in the electrical box, the technician:
  - should have attended a training in flammable refrigerants;
  - must possess a certificate from Bosch product training for this product.
- To install or commission this product, the technician/installer:
  - should have attended a training in flammable refrigerants;
  - must possess a certificate from Bosch product training for this product.

SOLAR PLAZA
Solarsysteme und Wärmepumpen

BOSCH Compress 5800i AW12 OR-T ·erhältlich bei solarplaza.at

2.2 Safety precautions

In reference to IEC 60335-1 and 60335-2-40, the following safety precautions have been defined and must be carefully regarded. Noncompliance with safety precautions may result in fire or explosion.

General information

- Do not use means to accelerate the defrosting process or to clean other than those recommended by the manufacturer.
- Do not pierce or burn.
- Be aware that the refrigerant may not contain any odour.
- Follow all national and regional regulations, technical regulations and guidelines.
- Follow manufacturer recommendations for servicing.
- Replace components only with official parts specified by the manufacturer.

Service and maintenance

- Wear all necessary personal protective equipment.
- No sources of ignition such as contactors, lamps, electrical switches or cigarette smoke are permitted within the protection zone (working area).
  >> *Definition of protection zone, see installation instructions.*
- Tools that can create sparks, e.g. electrical screw drivers/power tools, must be avoided.
- Check that tools and equipment are faultless and approved for refrigerant R290.
- Always use a portable A3-classified fan to decrease the risk of combustible gas mixture formation.
- Prior and during working procedures, make sure that there are not refrigerant leaks with an appropriate refrigerant detector (i.e. no sparking, that is adequately sealed and intrinsically safe). Under no circumstances shall potential ignition sources be used for detection of refrigerant leaks. A halide torch (or any other detector using a naked flame) must not be used.
- When conducting any hot work, keep dry powder or CO_2 fire extinguisher ready.
- When changing electrical components, assure that these fit the purpose and have the correct specifications.
- Check that markings and signs are legible.
- Check that refrigerant pipes or components which contain refrigerant are not exposed to corrosive substances, unless these are corrosion resistant or protected against corrosion.
- Before any repair and maintenance procedures, perform an initial safety check and component inspection procedure to check that:
  - all electrical components are switched off and wiring is not exposed when charging, recovering or purging the system;
  - capacitors are discharged;
  - earth bonding continuity is ensured at all times, also when power to the appliance is switched off.
- If concluded that a fault (reason for service) could compromise safety, but no proper repair can be carried out immediately, there shall be no electrical supply to the appliance in the meantime. The owner of the appliance shall be informed about the circumstances, incl. eventual applied adequate temporary solution.

SOLAR PLAZA
Solarsystemen und Wärmepumpen

BOSCH Compress 5800i AW12 OR-T ·erhältlich bei solarplaza.at

Sealed electrical components

- Sealed electrical components shall not be repaired.

Cabling

- Ensure that cabling is not subject to adverse environmental effects (e.g. wear, corrosion, excessive pressure, sharp edges). Take in consideration aging effects and vibration.

Refrigerant leak detection

- Potential ignition sources must not be used for detecting refrigerant leaks. A halide torch (or any other detector using naked flames) must not be used.
- Electronic leak detectors can be used with adequate calibration. The detector must be calibrated for R290 and set to ≤ 25% of the lowest flashpoint.
- Fluid leak detectors (such as bubble or fluorescent agents method) can also be used. However fluid detectors containing chlorine should not be used as it may corrode copper pipes.
- If a leak is detected all naked flames must be extinguished. Consequently, if the leak requires brazing work, all refrigerant must be recovered or isolated before.

Refrigerant removal and circuit evacuation

- Before undertaking a repair which requires opening of the refrigerant circuit, the refrigerant has to be safely removed following local and national regulations:
    1. evacuate the refrigerant and recover into the correct cylinders;
    2. vacuum the circuit;
    3. purge the circuit with oxygen-free nitrogen;
    4. vacuum the circuit for at least 30 minutes;
    5. open the circuit, when using flame to open circuit, continuously flush with oxygen-free nitrogen.
- Ensure that the outlet of the vacuum pump is not in close contact with potential ignition sources and that the surrounding area is ventilated.
- Purge the system with oxygen-free nitrogen (do not use compressed air or oxygen for purging). Note that this process may have to be repeated several times to ensure that no refrigerant remains in the circuit.
- The system shall be vented down to atmospheric pressure when the final oxygen-free nitrogen charge is used. This operation is completely necessary before opening the circuit and starting the repair.
- When removing compressors or compressor oils, ensure that these have been evacuated properly and that no refrigerant remains in within the lubricant.

Recovery of refrigerant

- Recovery equipment and cylinders must follow the required standards.
- Ensure that the recovery cylinders are appropriate for the refrigerant R290, are correctly labelled and complete, with pressure relief valve and shut off valve.
- Make sure that the correct number of cylinders for holding the system charge is available.
- All cylinders must be empty, evacuated and cooled before starting the recovery process. The cylinders shall be kept in an appropriate position according to the instructions throughout the recovery process.
- Ensure that calibrated weighing scales are available.
- Ensure that all recovery equipment is in good working condition, with a set of instructions available.
- Ensure that the recovery machine’s electrical components are sealed.

SOLAR PLAZA
Solarsysteme und Wärmepumpen

BOSCH Compress 5800i AW12 OR-T ·erhältlich bei solarplaza.at

- Only operate the recovery machine according to the instructions.
- Ensure that hoses are leak-free and in good conditions.
- Never overfill (more than 80%) or exceed maximum working pressure of cylinders.
- When the process is complete, remove the cylinder and equipment from the site promptly and close isolation valves.
- Do not mix different refrigerants in recovery units or cylinders.
- Cylinders filled with recovered refrigerant shall be returned to the refrigerant supplier.

Charging procedures

- Ensure that charging equipment is not contaminated with different refrigerants.
- Keep the length of hoses and lines to a minimum to minimise the amount of refrigerant contained.
- Before charging, assure that the refrigerant system is earthed.
- Label the system with the charge amount.
- Do not overfill the refrigerant system.
- Test the pressure with an appropriate purging gas, before recharging the system.
- After charging the system and before leaving the installation site, perform a leakage test.

SOLAR PLAZA
Solarsystemen und Wärmepumpen

BOSCH Compress 5800i AW12 OR-T ·erhältlich bei solarplaza.at

3 System overview

3.1 Principle sketch ODU

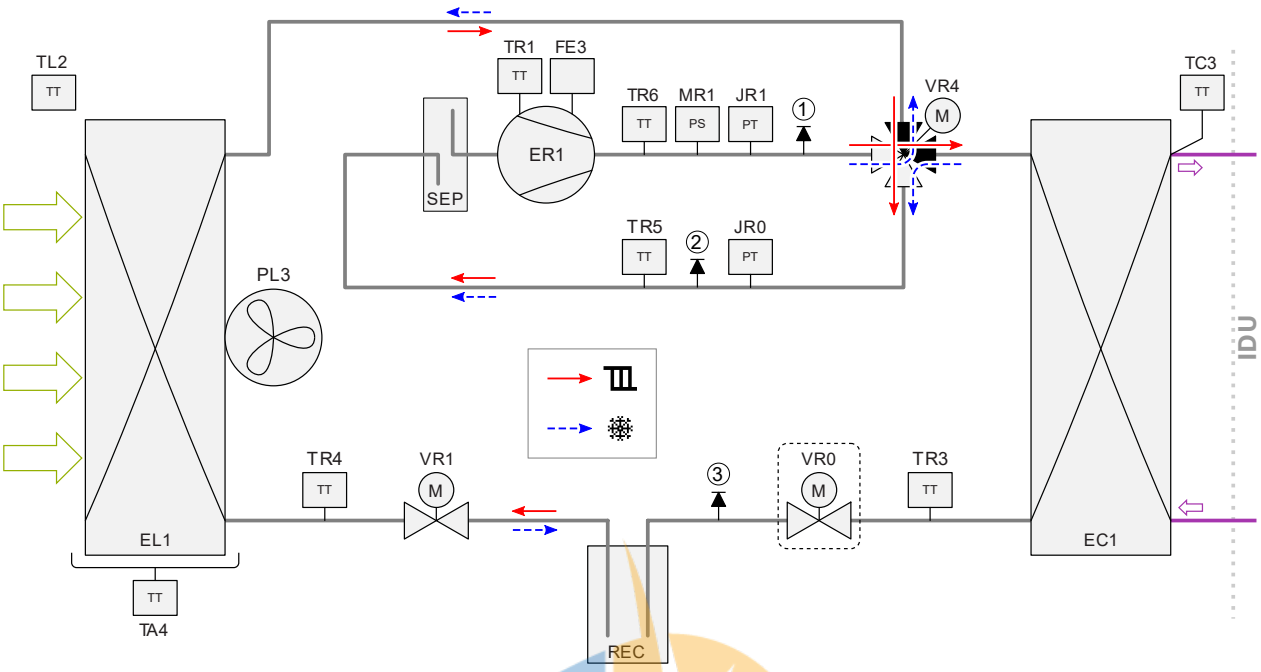

1, 2, 3	Schrader valves	TA4	Drip tray temperature sensor
EC1	Plate heat exchanger, condenser in heating mode	TC3	Condensing temperature sensor
EL1	Air coil, evaporator in heating mode	TL2	Inlet air temperature sensor
ER1	Compressor	TR1	Compressor body temperature sensor
FE3	Thermostatic switch for compressor	TR3	Liquid pipe temperature sensor, heating mode
JR0	Low pressure sensor	TR4	Liquid pipe temperature sensor, cooling mode
JR1	High pressure sensor	TR5	Suction gas temperature sensor
MR1	High pressure switch	TR6	Discharge/hot gas temperature sensor
PL3	Fan	VR0	Expansion valve, only present in large chassis
REC	Receiver	VR1	Expansion valve
SEP	Liquid separator	VR4	4-way valve

SOLAR PLAZA
Solarsystemen und Wärmepumpen

BOSCH Compress 5800i AW12 OR-T ·erhältlich bei solarplaza.at

3.2 Principle sketch IDU

3.2.1 Floor standing IDU (AWM, T180, AirModule)

Floor standing IDU with integrated DHW cylinder, electrical heater and micro buffer cylinder.

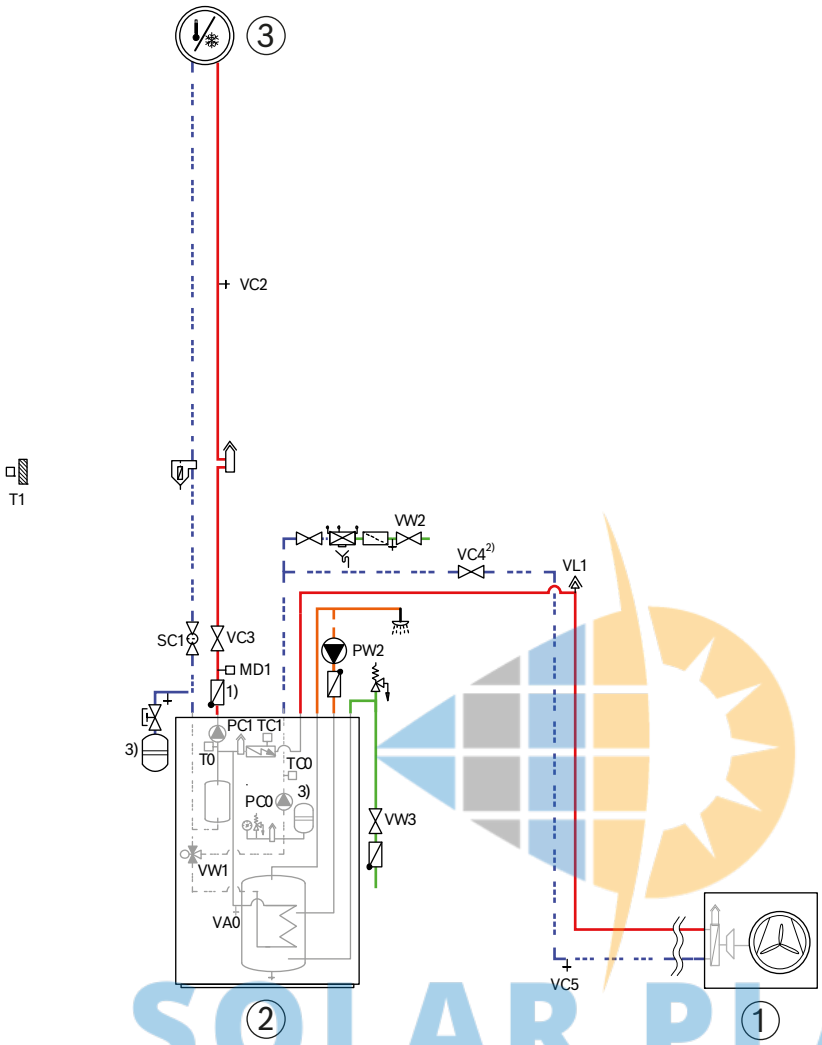

[1]	ODU	VA0	Drain valve
[2]	IDU	VC2	Drain valve for heating/cooling system
[3]	Heating/cooling system	VC3	Shut off valve
MD1	Condensation sensor	VC4	Shut off valve
PC0	Circulation pump heat carrier	VC5	Drain valve
PC1	Circulation pump heating/cooling circuit	VL1	Automatic vent valve
PW2	Circulation pump DHW	VW1	Diverter valve, switching between heating/cooling and DHW
SC1	Particle filter	VW2	Fill valve
T0	Flow temperature sensor	VW3	Cold water valve
T1	Outdoor temperature sensor	1)	Optional non-return valve, mandatory at cooling mode
TC0	Heat carrier return temperature sensor	2)	Required for the recommended filling procedure
TC1	Heat carrier flow temperature sensor	3)	Optional external expansion vessel if it is not integrated

SOLAR PLAZA
Solarsysteme und Wärmepumpen

BOSCH Compress 5800i AW12 OR-T ·erhältlich bei solarplaza.at

3.2.2 Wall hung IDU (AWE, E, AirBox)

Wall hung IDU with electrical heater.

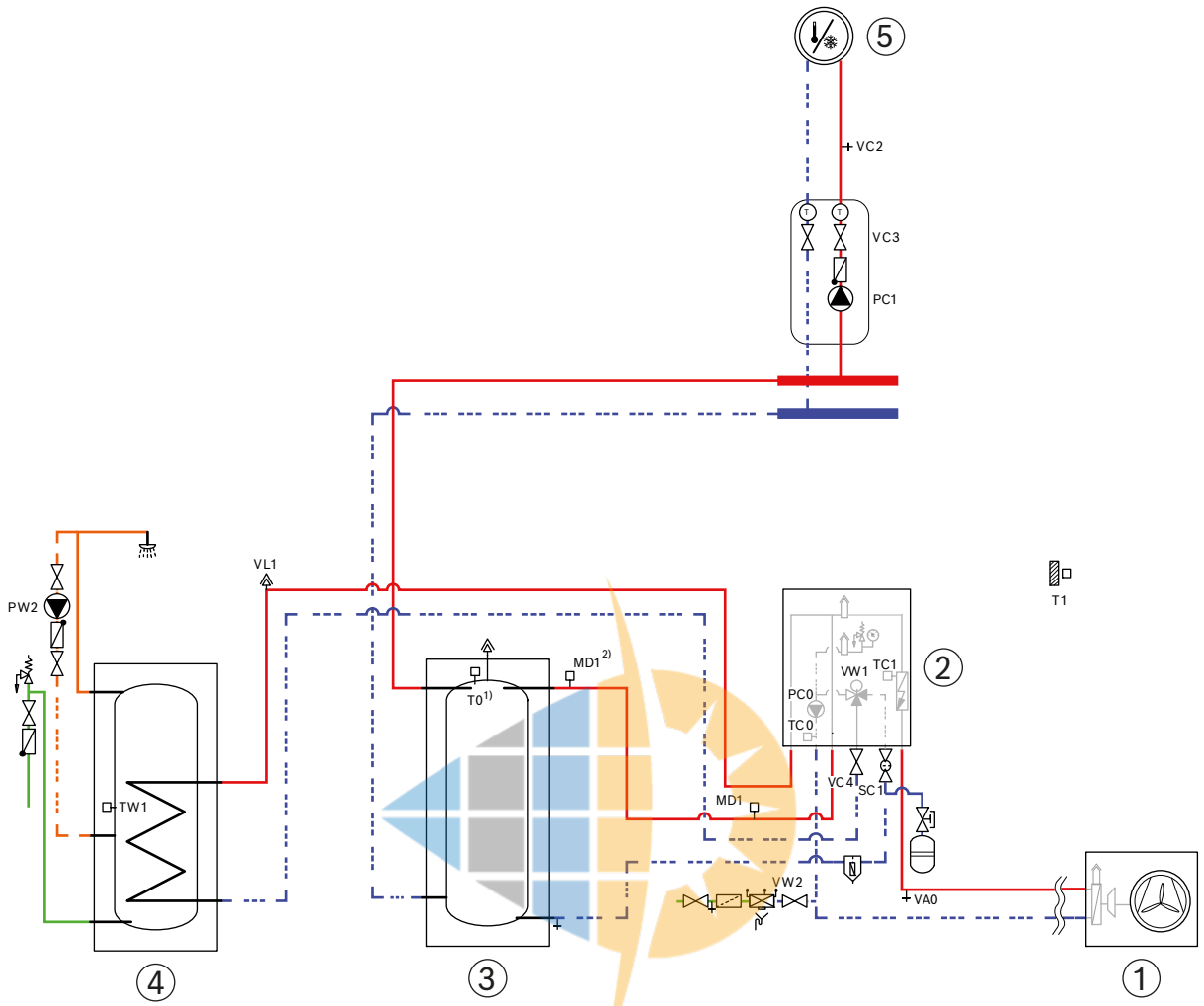

[1]	ODU	TC0	Heat carrier return temperature sensor
[2]	IDU	TC1	Heat carrier flow temperature sensor
[3]	Buffer cylinder	TW1	DHW temperature sensor
[4]	DHW cylinder	VA0	Drain valve
[5]	Heating/cooling system	VC2	Drain valve for heating/cooling system
MD1	Condensation sensor	VC3	Shut off valve
PC0	Circulation pump heat carrier	VC4	Shut off valve
PC1	Circulation pump heating/cooling system	VL1	Automatic vent valve
PW2	Circulation pump DHW	VW1	Diverter valve, switching between heating/cooling and DHW
SC1	Particle filter	VW2	Fill valve
T0	Flow temperature sensor	1)	Check technical information regarding insertion depth
T1	Outdoor temperature sensor	2)	Optional

SOLAR PLAZA
Solarsystemen und Wärmepumpen

BOSCH Compress 5800i AW12 OR-T ·erhältlich bei solarplaza.at

3.2.3 Floor standing IDU (AWMB, TP70, AirModule B)

Floor standing IDU with integrated buffer cylinder and electrical heater.

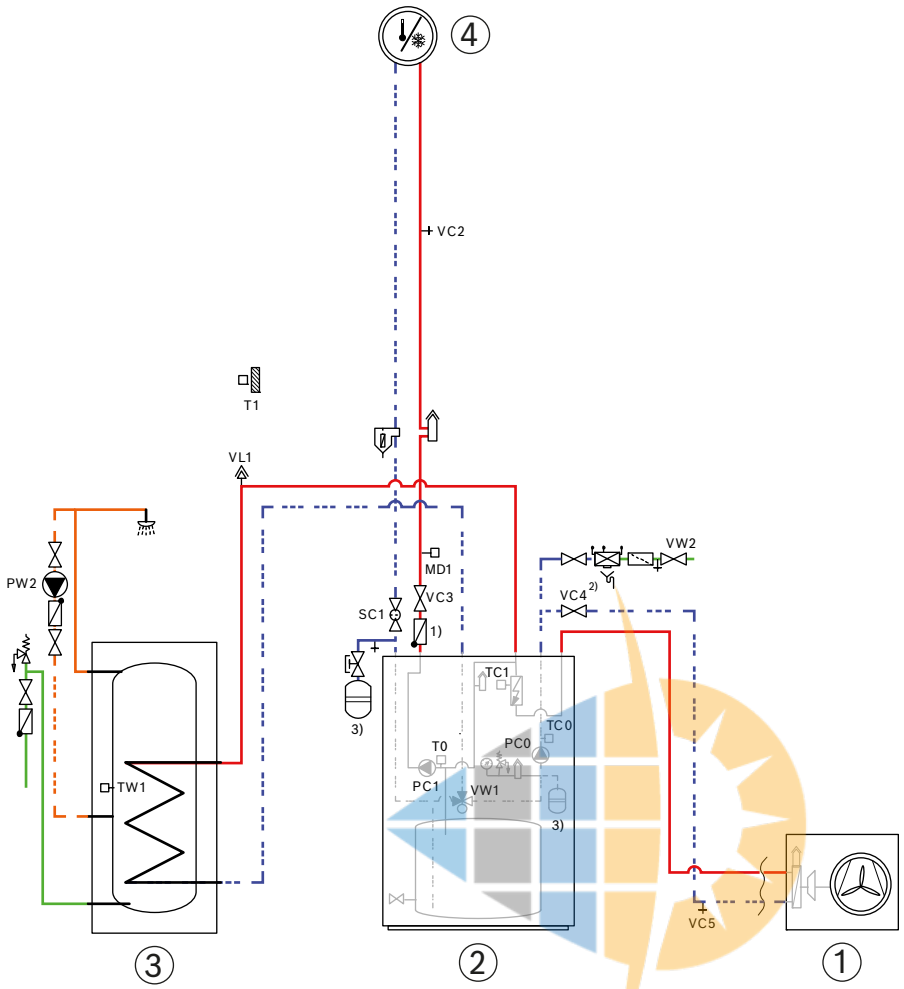

[1]	ODU	TC1	Heat carrier flow temperature sensor
[2]	IDU	TW1	DHW temperature sensor
[3]	DHW cylinder	VC2	Drain valve for heating/cooling system
[4]	Heating/cooling system	VC3	Shut off valve
MD1	Condensation sensor	VC4	Shut off valve
PC0	Circulation pump heat carrier	VC5	Drain valve
PC1	Circulation pump heating/cooling system	VL1	Automatic vent valve
PW2	Circulation pump DHW	VW1	Diverter valve, switching between heating/cooling and external DHW
SC1	Particle filter	VW2	Fill valve
T0	Flow temperature sensor	1)	Optional non-return valve, mandatory at cooling mode
T1	Outdoor temperature sensor	2)	Required for the recommended filling procedure
TC0	Heat carrier return temperature sensor	3)	Optional external expansion vessel if it is not integrated

SOLAR PLAZA
Solarsysteme und Wärmepumpen

BOSCH Compress 5800i AW12 OR-T ·erhältlich bei solarplaza.at

4 Component technical data

4.1 ODU

4.1.1 Temperature sensors

Name	Function	Sensor type
TA4	Drip tray	NTC, R0
TC3	Heat transfer medium flow (PHE)	NTC, R40
TL2	Air inlet	NTC, R0
TR1	Compressor body	NTC, R80
TR3	Condenser return (liquid), heating mode	NTC, R40
TR4	Evaporator return (liquid), cooling mode	NTC, R40
TR5	Suction gas	NTC, R0
TR6	Hot gas	NTC, R80

NTC, R0

[°C]	[Ω]
-40	154300
-35	111700
-30	81700
-25	60400
-20	45100
-15	33950
-10	25800
-5	19770
0	15280
5	11900
10	9330
15	7370
20	5870
25	4700
30	3890
35	3070
40	2510
45	2055
50	1696
55	1405
60	1170
65	980
70	824
75	696
80	590
85	503
90	430

NTC, R40

[°C]	[Ω]
-20	96358
-15	72510
-10	55054
-5	42162
0	32556
5	25339
10	19872
15	15699
20	12488
25	10001
30	8060
35	6536
40	5331
45	4372
50	3605
55	2989
60	2490
65	2084
70	1753
75	1480
80	1256
85	1070
90	915

NTC, R80

[°C]	[Ω]
-20	198500
-15	148600
-10	112400
-5	85790
0	66050
5	51220
10	40040
15	31540
20	25030
25	20000
30	16090
35	13030
40	10610
45	8697
50	6899
55	5937
60	4943
65	4137
70	3478
75	2938
80	2492
85	2123
90	1816
95	1559
100	1344
105	1162
110	1009
115	879

SOLAR PLAZA
Solarsysteme und Wärmepumpen

BOSCH Compress 5800i AW12 OR-T ·erhältlich bei solarplaza.at

4.1.2 Compressor [ER1]

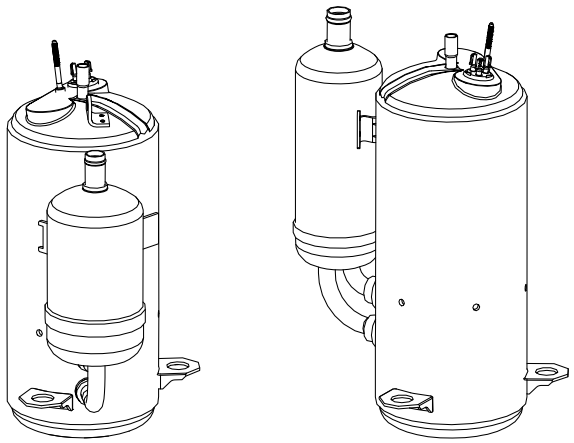

Oil:	HAF68
Resistance (line to line):	0,502Ω (20°C)
Thermostatic switch (FE3):	opens @ 115°C (±3K) close @ 95°C (±5K)

4.1.3 Inverter

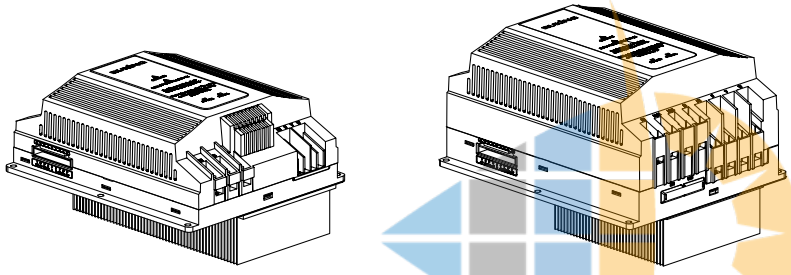

LED at normal working, compressor in stand-by:	Flash 1.0s ON, 1,0s OFF
LED at error mode:	Flash 0,25s ON, 0,25s OFF then flash a number of times (refers to an error from 1 to 19) followed by 2s OFF, 2s ON and 1s OFF

4.1.4 Fan [PL3]

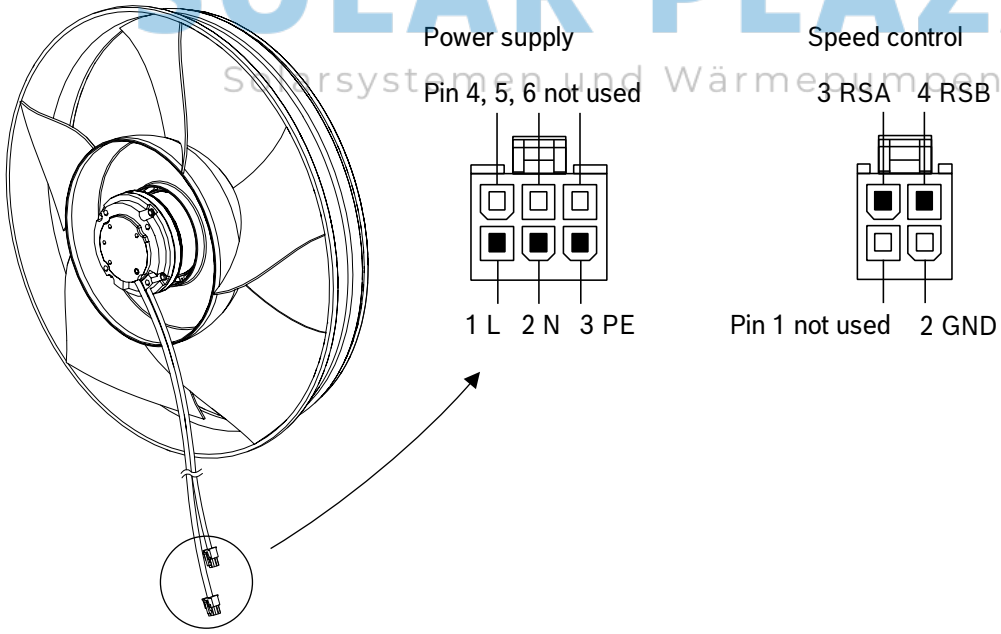

Power supply:	230V / 50Hz
Speed control:	Modbus

SOLAR PLAZA
Solarsystemen und Wärmepumpen

BOSCH Compress 5800i AW12 OR-T ·erhältlich bei solarplaza.at

4.1.5 Low pressure sensor [JR0]

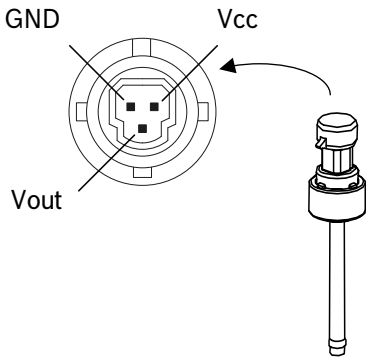

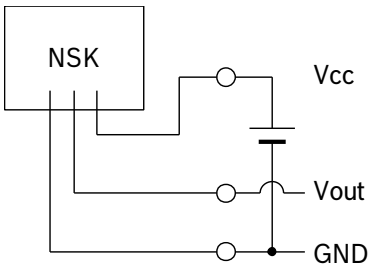

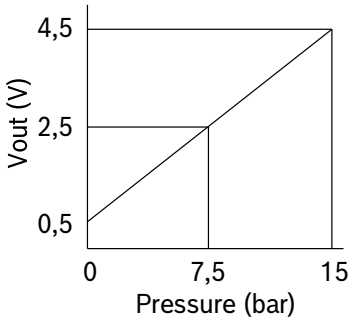

Power supply:	5V DC
Output:	0,5 to 4,5V
Pressure range:	0 to 15bar
Total accuracy:	±1%

4.1.6 High pressure sensor [JR1]

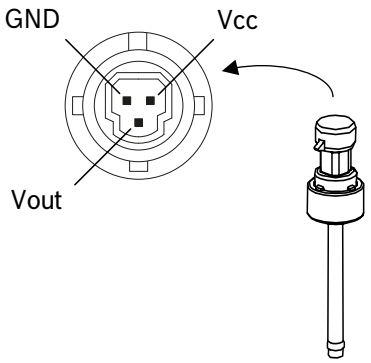

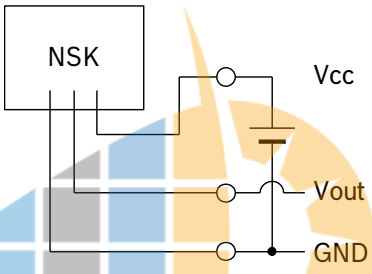

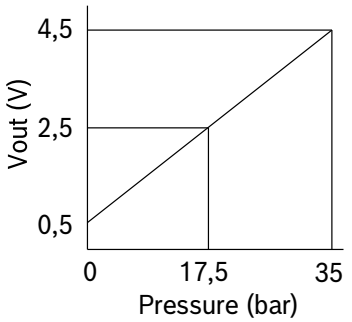

Power supply:	5V DC
Output:	0,5 to 4,5V
Pressure range:	0 to 35bar
Total accuracy:	±1%

SOLAR PLAZA
Solarsystemen und Wärmepumpen

4.1.7 High pressure switch [MR1]

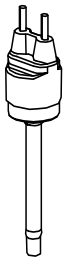

Operating pressure characteristics:

OFF	32 ±1bar
ON	26 ±1bar
Power supply:	5V DC (normally closed)

BOSCH Compress 5800i AW12 OR-T ·erhältlich bei solarplaza.at

4.1.8 Drip tray heater [EA0]

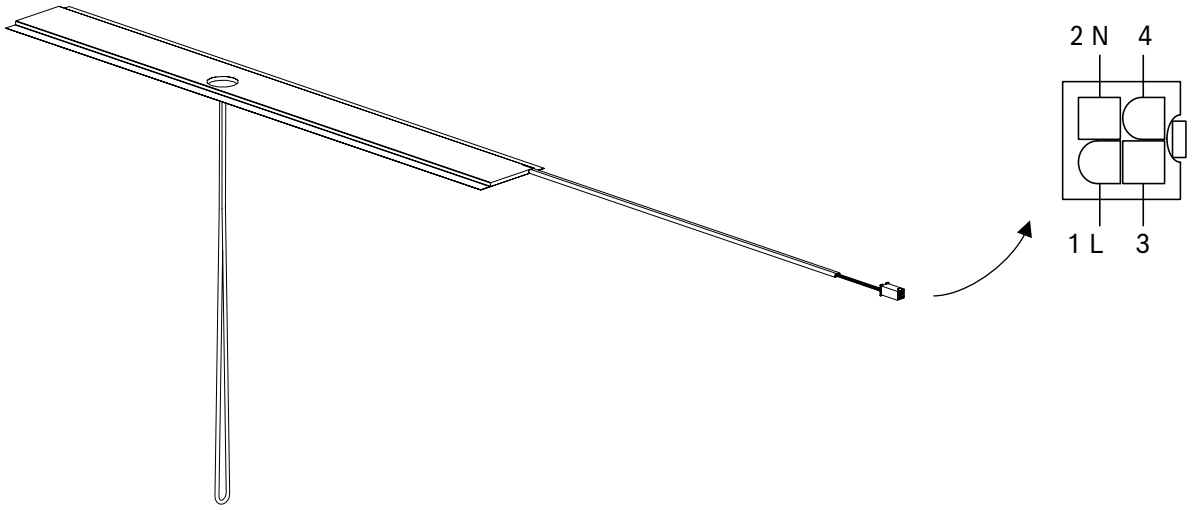

Power supply:	230V
Consumption:	85W
Resistance:	622Ω ±10%

4.1.9 Electronic expansion valve [VR0] and [VR1]

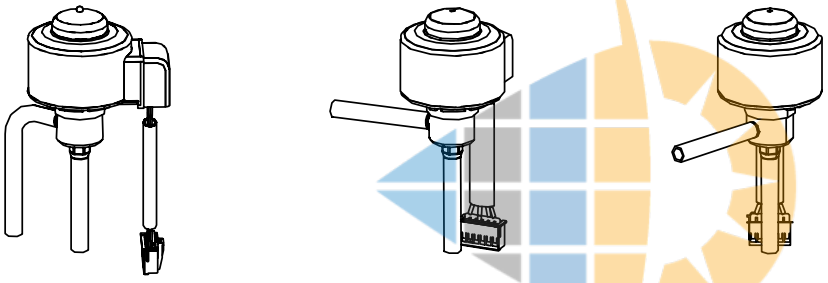

Power supply:	12V DC (+15% / -10%)
Insulation resistance:	DC 500V ≥100MΩ

4.1.10 4-way valve [VR4]

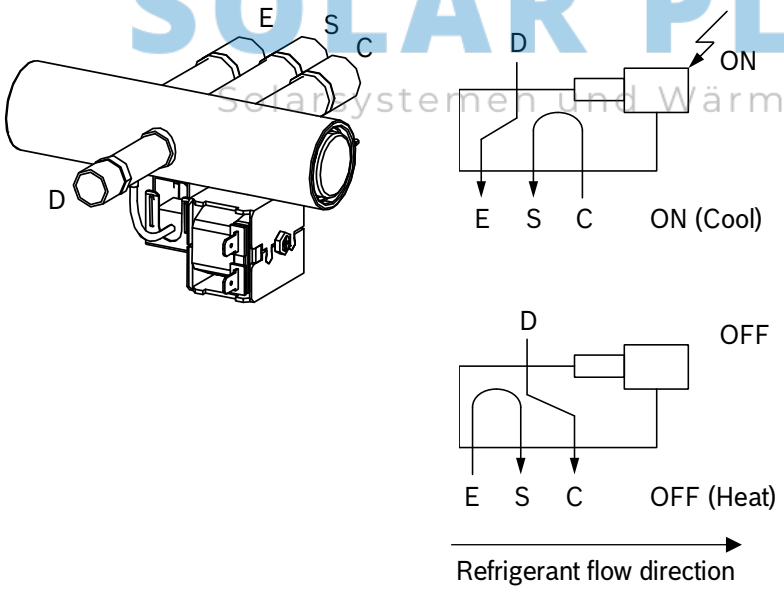

Power supply:	24V DC / 9W
Insulation resistance	100MΩ

SOLAR PLAZA
Solarsystemen und Wärmepumpen

BOSCH Compress 5800i AW12 OR-T ·erhältlich bei solarplaza.at

4.2 IDU

4.2.1 Temperature sensors

Name	Function	Sensor type
T0	Flow	NTC, R40
T1	Outdoor	NTC, R0
TC0	Heat transfer medium return	NTC, R40
TC1	Heat transfer medium flow	NTC, R40
TW1	DHW, lower position	NTC, R40/R60 *)
TW2	DHW, upper position	NTC, R40

*) Note that the DHW sensor has different characteristics for different brands. R40 is used for Buderus and IVT. R60 is used for Bosch. When the optional TW2 is connected, TW1 is always treated as an R40 sensor.

NTC, R0

[°C]	[Ω]
-40	154300
-35	111700
-30	81700
-25	60400
-20	45100
-15	33950
-10	25800
-5	19770
0	15280
5	11900
10	9330
15	7370
20	5870
25	4700
30	3890
35	3070
40	2510
45	2055
50	1696
55	1405
60	1170
65	980
70	824
75	696
80	590
85	503
90	430

NTC, R40

[°C]	[Ω]
-20	96358
-15	72510
-10	55054
-5	42162
0	32556
5	25339
10	19872
15	15699
20	12488
25	10001
30	8060
35	6536
40	5331
45	4372
50	3605
55	2989
60	2490
65	2084
70	1753
75	1480
80	1256
85	1070
90	915

NTC, R60

[°C]	[Ω]
20	14768
25	11977
30	9783
35	8045
40	6650
45	5521
50	4606
55	3855
60	3242
65	2744
70	2332
75	1989
80	1703
85	1463
90	1262

SOLAR PLAZA
Solarsysteme und Wärmepumpen

BOSCH Compress 5800i AW12 OR-T ·erhältlich bei solarplaza.at

4.2.2 Circulation pump [PC0 and PC1]

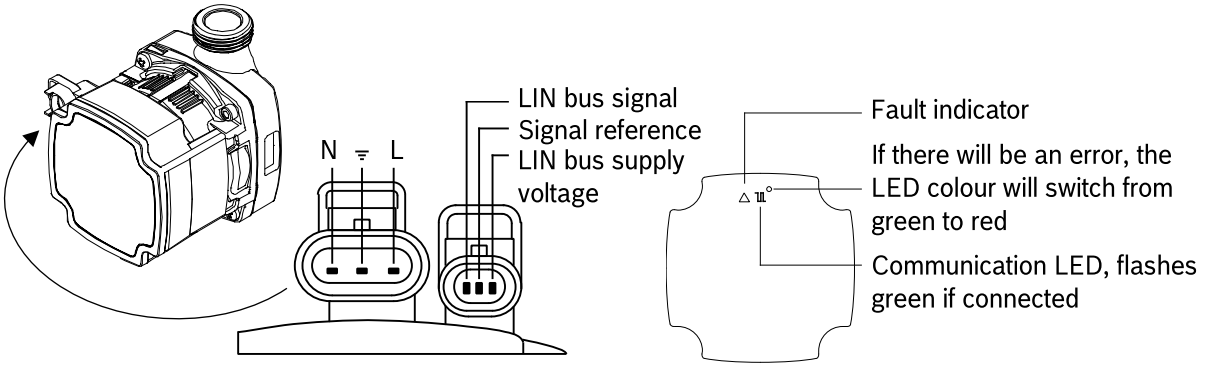

Power supply:	230V / 50Hz
Speed control:	Modbus

SOLAR PLAZA
Solarsystemen und Wärmepumpen

BOSCH Compress 5800i AW12 OR-T ·erhältlich bei solarplaza.at

5 Control unit

5.1 Access level for installer

Technicians need to hold the Menu button pressed for 5 s in the main window, to access the service menu. We discourage technicians from informing customers about this entry.

5.2 Quick start

```
Service/
   System settings/
      Heat pump/
         Quick start compressor
```

The heat pump can be quick started by invoking the command from the HMI. By doing this, the preheating phase for the compressor is skipped, hence the normal compressor body temperature requirement is ignored. The PID regulator output for compressor modulation is immediately raised to initialization level. After pressure equalization, the compressor should start within a minute.

Too frequent starts cause wear on the compressor and quick starts should be used with reason, and only during service interventions. The heat pump may produce warning messages if the compressor is quick started with liquid refrigerant still inside the compressor. It is therefore recommended to energize the heat pump as soon as possible during installation, to give the compressor time to heat up to the approved working temperature before start.

5.3 Activation of operation with only additional heater

So-called alarm operation with only additional heater is activated automatically when a compressor-blocking alarm has been active for one hour. When the alarm is acknowledged, alarm operation ends, and the heat pump is allowed to make a new start attempt. If a new alarm is given, alarm operation with additional heater is delayed yet again.

In the event of time-consuming repairs of the ODU, it can be desirable to temporarily configure the system for operation with only additional heater, to evade the conditional alarm operation. There are two options in the menus, marked **(2)** and **(3)** below.

SOLAR PLAZA
Solarsystemen und Wärmepumpen

```
Service/
   System settings/
      Auxiliary heater/
         Expert view {Off, On}                              (1)
         Stand-alone mode {No, Yes}                         (2)
         Auxiliary heater only {No, Yes}                    (3)
```

(2) = Yes, means that the control unit completely ignores the outdoor unit. It can be disconnected electrically from the system, without giving rise to alarms. Furthermore, operation with only additional heater is activated.

(3) = Yes, in contrast, means activation of only additional heater but with continued monitoring of the outdoor unit. If for instance a sensor is broken in the refrigerant circuit, it will trigger an alarm. **(3)** is visible when **(1)** = On.

Both settings can be set at the same time, but produces the same result as if only **(2)** = Yes.

BOSCH Compress 5800i AW12 OR-T ·erhältlich bei solarplaza.at

6 Troubleshooting

6.1 Alarm list

On the next page follows a list of error codes that can be produced by the heat pump. Information about registered errors is found in the following menus.

```
Service/
   Diagnosis/
      Faults/
         Active system faults            (1)
         Heat pump faults history        (2)
         System faults history           (3)
```

(1) shows active errors whose conditions are still fulfilled.
(2) only shows errors which have previously been registered for the heat pump. Here is it also possible to open a so-called “snapshot” – a momentary view of sensors and other components from the event of the error.
(3) shows errors which have previously been registered in the installation as a whole, which includes the heat pump, but also accessories like room sensors, mixing modules, etc.

Error codes can be divided in two groups; alarm and info. Info messages are intended as early notifications about issues which may be worth investigating further – additional information for the technician only, for more accurate troubleshooting. Info messages alone do not justify the replacement of physical components in the heat pump, unless they cause lengthy disturbances.

The column “Buzzer” indicates with and ‘x’ if the error code produces an audible signal to call for the customer’s attention. For some error codes defined for the additional heater, the buzzer is only activated if compressor operation is simultaneously blocked (i.e. when no heat source is usable). These codes have been marked “(x)”. Some possible causes for blocked compressor operation are: too low outdoor temperature, active de-airing routine, detected air in the system, active external input (configured for blocking compressor), stand-alone operation / electrical heater operation only, detected undervoltage, etc.

After power-up of the appliance, all alarms are inactive for 30 s.

SOLAR PLAZA
Solarsystemen und Wärmepumpen

BOSCH Compress 5800i AW12 OR-T ·erhältlich bei solarplaza.at

Error Code	Display Code(s)	Display Level	Alarm Text	Buzzer	Alarm Definition	Possible Cause	Action
810	A01	Customer	Info The last thermal disinfection failed		Daily heat-up is one of the functions used for preventing formation of legionella in the DHW volume. The cylinder gets heated to a defined temperature, 60°C, once per day. Failure to reach 60°C in 180 minutes, will trigger the error code. The error code is automatically cleared when the temperature is reached or when a new daily heat-up is started. Manual reset is not possible.	Hot water is continuously tapped from the cylinder and the system is unable to keep up.	No action needed. (Stop continuous usage and let the next daily heat-up run its course.)
						Air in the heating coil.	De-air the heating coil.
						Incorrect temperature reading from sensor TW1.	With the temperature sensor disconnected from the XCU-THH board, check its temperature reading. Replace sensor is necessary.
						Hot water sensor is misplaced, or has come loose from the cylinder.	Check sensor position and adjust if needed.
						Incorrectly connected pipes to DHW system.	Fixe pipe connection issues.
1001	A21 A22 A23 A24	Customer	No comm. betw. system controller and remote control		Room sensor will display error code A21/A22/A23/A24 depending on which heating circuit 1-4 it controls. The Room sensor has first been installed successfully. Then the EMS bus signal has gone absent from the parent controller (display).	Poor EMS connection between display and installer board.	Check both ends of EMS cabling between the boards.
1010	A01	Customer	No communication via EMS BUS connection		The local device has not received its EMS bus token from the EMS bus master before timeout. Error code is cleared when communication is re-established.	Bad connection of EMS cable.	Check that the EMS bus cables(s) is/are properly connected.
						Defective EMS bus cabling.	Detach extension modules from the EMS bus and restart the system. Check if the cause for the error is in the module or the cable.

SOLAR PLAZA
Solarsystemen und Wärmepumpen

BOSCH Compress 5800i AW12 OR-T ·erhältlich bei solarplaza.at

Error Code	Display Code(s)	Display Level	Alarm Text	Buzzer	Alarm Definition	Possible Cause	Action
1017	A01	Customer	Info Operating pressure too low		The pressure in the heating/cooling circuit, measured by the JC0 pressure sensor, is lower than 0.7 bar. System is still functional but a critical error can be expected in the future if the issue is not resolved. Requires manual reset. JC0 needs to be higher than 1.3 bar.	Heating system has been vented without topping up with water afterwards.	Fill system to appropriate pressure.
						Precharge pressure no longer present in the expansion vessel.	An expansion vessel is not totally diffusion tight and can, over time, loose some small amount of pressure. Drain a small amount of water from the heating system and measure the precharge of the expansion vessel. A pressure loss lower than 2%/month is not covered by warranty. Inflate expansion vessel to defined precharge. Then refill and vent the system.
						Expansion vessel is too small for the system.	The expansion vessel must be able to take the whole heating systems expansion. If the integrated expansion vessel is too small for the heating system, there must be an extra external expansion vessel mounted.
						Heating pressure relief valve not tight.	Replace pressure relief valve.
						Leak in heating system.	Locate and seal the leak.
						Dirt deposits at test point in pressure sensor.	Replace pressure sensor.
1041	A11	Customer	Voltage failure during screed drying		The alarm is given if power is lost during ongoing screed drying program. The program is automatically resumed when the power is back, unless the interruption outlasts the battery reserve of the control unit, or if the set maximum time (normally 12 h) has been exceeded.	Power loss.	Check fuses, possible bad connections etc.
1081	A61	Customer	Two master remote controls in system		The room sensor for heating circuit 1 has been incorrectly configured as a controller ("CO"/"SC").	The display unit in the indoor unit is always the controller in the system, and more than one is not allowed.	Configure the room sensor for remote control "Fb". See room sensors' installation guide for more information.
1082	A62	Customer	Two master remote controls in system.		The room sensor for heating circuit 2 has been incorrectly configured as a controller ("CO"/"SC").	The display unit in the indoor unit is always the controller in the system, and more than one is not allowed.	Configure the room sensor for remote control "Fb". See room sensors' installation guide for more information.
1083	A63	Customer	Two master remote controls in system.		The room sensor for heating circuit 3 has been incorrectly configured as a controller ("CO"/"SC").	The display unit in the indoor unit is always the controller in the system, and more than one is not allowed.	Configure the room sensor for remote control "Fb". See room sensors' installation guide for more information.

SOLAR PLAZA
Solartechnik und Wärmepumpen

BOSCH Compress 5800i AW12 OR-T ·erhältlich bei solarplaza.at

Error Code	Display Code(s)	Display Level	Alarm Text	Buzzer	Alarm Definition	Possible Cause	Action
1084	A64	Customer	Two master remote controls in system.		The room sensor for heating circuit 4 has been incorrectly configured as a controller ("CO"/"SC").	The display unit in the indoor unit is always the controller in the system, and more than one is not allowed.	Configure the room sensor for remote control "Fb". See room sensors' installation guide for more information.
1182	A11	Customer	Mismatch between stored system configuration and configuration of ventilation system.		Mismatch between stored system configuration and configuration of ventilation system.	Air heating selected for heating circuit 1, but ventilation system is not in "ventilation-based heating" (VBH) mode.	Align configurations.
						Air heating is not selected for heating circuit 1, but ventilation system is in "ventilation-based heating" (VBH) mode.	Align configurations.
1183	A11	Customer	Connection to the energy manager is interrupted		No communication with the energy manager for more than 60 minutes.	Broken connection.	Inspect communication cable. Reconnect, or replace if necessary.
1201	A91	Customer	Radio conn. betw. Comfort Key and room temp. sens. Lost		Control-Key has lost the radio connection with a wireless room sensor.	Broken radio connection between MX200 / K20 RF and wireless room sensor CR5 RF / TR2 RF, or between MX300 / K30 RF and wireless room sensor CR 20 RF.	Check battery and replace if necessary.
2971	A01	Customer	Info system pressure too low	x	The pressure in the heating/cooling circuit, measured by the JC0 pressure sensor, is lower than 0.6 bar. Operation is halted. Manual reset is not possible. Error code is automatically cleared when JC0 > 0.8 bar.	Heating system has been vented without topping up with water afterwards.	Fill system to appropriate pressure.
						Precharge pressure no longer present in the expansion vessel.	An expansion vessel is not totally diffusion tight and can, over time, loose some small amount of pressure. Drain a small amount of water from the heating system and measure the precharge of the expansion vessel. A pressure loss lower than 2%/month is not covered by warranty. Inflate expansion vessel to defined precharge. Then refill and vent the system.
						Expansion vessel is too small for the system.	The expansion vessel must be able to take the whole heating systems expansion. If the integrated expansion vessel is too small for the heating system, there must be an extra external expansion vessel mounted.
						Heating pressure relief valve not tight.	Replace pressure relief valve.
						Leak in heating system.	Locate and seal the leak.
						Dirt deposits at test point in pressure sensor.	Replace pressure sensor.

SOLAR PLAZA
Solarsystemen und Wärmepumpen

BOSCH Compress 5800i AW12 OR-T ·erhältlich bei solarplaza.at

Error Code	Display Code(s)	Display Level	Alarm Text	Buzzer	Alarm Definition	Possible Cause	Action
3021	A31	Customer	Heating circuit flow temp. sensor faulty - standby mode active		The circuit for the flow sensor, connected to the mixer module for circuit 1, is either shorted or broken. The alarm is delayed by 10 s. Standby mode means that the mixing valve opening position is set to 10%, to ensure frost protection.	Bad connection.	Check connection.
						Shorted cable / defective sensor.	Disconnect cable from mixing module and measure the sensor with a multimeter. If shorted (0 Ohm) or broken (infinite resistance), replace sensor.
3022	A32	Customer	Heating zone 2 supply temperature sensor error, standby mode active		The circuit for the flow sensor, connected to the mixer module for circuit 2, is either shorted or broken. The alarm is delayed by 10 s. Standby mode means that the mixing valve opening position is set to 10%, to ensure frost protection.	Bad connection.	Check connection.
						Shorted cable / defective sensor.	Disconnect cable from mixing module and measure the sensor with a multimeter. If shorted (0 Ohm) or broken (infinite resistance), replace sensor.
3023	A33	Customer	Heating zone 3 supply temperature sensor error, standby mode active		The circuit for the flow sensor, connected to the mixer module for circuit 3, is either shorted or broken. The alarm is delayed by 10 s. Standby mode means that the mixing valve opening position is set to 10%, to ensure frost protection.	Bad connection.	Check connection.
						Shorted cable / defective sensor.	Disconnect cable from mixing module and measure the sensor with a multimeter. If shorted (0 Ohm) or broken (infinite resistance), replace sensor.
3024	A34	Customer	Heating zone 4 supply temperature sensor defective, standby mode active		The circuit for the flow sensor, connected to the mixer module for circuit 4, is either shorted or broken. The alarm is delayed by 10 s. Standby mode means that the mixing valve opening position is set to 10%, to ensure frost protection.	Bad connection.	Check connection.
						Shorted cable / defective sensor.	Disconnect cable from mixing module and measure the sensor with a multimeter. If shorted (0 Ohm) or broken (infinite resistance), replace sensor.
3061	A11 A61	Customer	No communication with htg circ. module		A mixing module has previously been installed for heating circuit 1, but communication with the mixing module, over the EMS bus, has been unsuccessful for the past 4 minutes. The alarm is automatically acknowledged when communication is re-established.	Poor connection or improperly installed EMS cable between XCU-THH and mixing module.	Check EMS cabling.
3062	A11 A62	Customer	No communication with heating zone module		A mixing module has previously been installed for heating circuit 2, but communication with the mixing module, over the EMS bus, has been unsuccessful for the past 4 minutes. The alarm is automatically acknowledged when communication is re-established.	Poor connection or improperly installed EMS cable between XCU-THH and mixing module.	Check EMS cabling.

SOLAR PLAZA
Solaranlagen und Wärmepumpen

BOSCH Compress 5800i AW12 OR-T ·erhältlich bei solarplaza.at

Error Code	Display Code(s)	Display Level	Alarm Text	Buzzer	Alarm Definition	Possible Cause	Action
3063	A11 A63	Customer	No communication with heating zone module		A mixing module has previously been installed for heating circuit 3, but communication with the mixing module, over the EMS bus, has been unsuccessful for the past 4 minutes. The alarm is automatically acknowledged when communication is re-established.	Poor connection or improperly installed EMS cable between XCU-THH and mixing module.	Check EMS cabling.
3064	A11 A64	Customer	No communication with heating zone module		A mixing module has previously been installed for heating circuit 4, but communication with the mixing module, over the EMS bus, has been unsuccessful for the past 4 minutes. The alarm is automatically acknowledged when communication is re-established.	Poor connection or improperly installed EMS cable between XCU-THH and mixing module.	Check EMS cabling.
3071	A11 A61	Customer	No communication with remote control		A room sensor has previously been installed for heating circuit 1, but communication with its room sensor, over the EMS bus, has been unsuccessful for the past 4 minutes. The alarm is automatically acknowledged when communication is re-established.	Poor connection or improperly installed EMS cable between XCU-THH and room sensor.	Check EMS cabling.
3072	A11 A62	Customer	No communication with remote control		A room sensor has previously been installed for heating circuit 2, but communication with its room sensor, over the EMS bus, has been unsuccessful for the past 4 minutes. The alarm is automatically acknowledged when communication is re-established.	Poor connection or improperly installed EMS cable between XCU-THH and room sensor.	Check EMS cabling.
3073	A11 A63	Customer	No communication with remote control		A room sensor has previously been installed for heating circuit 3, but communication with its room sensor, over the EMS bus, has been unsuccessful for the past 4 minutes. The alarm is automatically acknowledged when communication is re-established.	Poor connection or improperly installed EMS cable between XCU-THH and room sensor.	Check EMS cabling.
3074	A11 A64	Customer	No communication with remote control		A room sensor has previously been installed for heating circuit 4, but communication with its room sensor, over the EMS bus, has been unsuccessful for the past 4 minutes. The alarm is automatically acknowledged when communication is re-established.	Poor connection or improperly installed EMS cable between XCU-THH and room sensor.	Check EMS cabling.

SOLAR PLAZA
Solaranlagen und Wärmepumpen

BOSCH Compress 5800i AW12 OR-T ·erhältlich bei solarplaza.at

Error Code	Display Code(s)	Display Level	Alarm Text	Buzzer	Alarm Definition	Possible Cause	Action
3081	A11	Customer	Configuration error: Remote control not used		The room sensor has been configured to control circuit 1, which is not defined.	The room sensor has been configured to control circuit 1, which is not defined.	Ensure that the room sensor refers to the correct heating circuit. Alternatively, check the configuration for circuit 1.
3082	A11	Customer	Configuration error: Remote control not used		The room sensor has been configured to control circuit 2, which is not defined.	The room sensor has been configured to control circuit 2, which is not defined.	Ensure that the room sensor refers to the correct heating circuit. Alternatively, check the configuration for circuit 2.
3083	A11	Customer	Configuration error: Remote control not used		The room sensor has been configured to control circuit 3, which is not defined.	The room sensor has been configured to control circuit 3, which is not defined.	Ensure that the room sensor refers to the correct heating circuit. Alternatively, check the configuration for circuit 3.
3084	A11	Customer	Configuration error: Remote control not used		The room sensor has been configured to control circuit 4, which is not defined.	The room sensor has been configured to control circuit 4, which is not defined.	Ensure that the room sensor refers to the correct heating circuit. Alternatively, check the configuration for circuit 4.
3091	A11 A61	Customer	Room temperature sensor faulty		The resistance thermometer inside the room sensor for heating circuit 1 is defective. (EMS communication is working.) An incorrect configuration of the room sensor will produce the same alarm.	Incorrect configuration of external room sensor.	Check setting in Service/ System settings/ Heating / Cooling/ Heating circuit 1/ Remote control type.
						Broken room sensor.	The room sensor must be replaced.
3092	A11 A62	Customer	Room temperature sensor error		The resistance thermometer inside the room sensor for heating circuit 2 is defective. (EMS communication is working.) An incorrect configuration of the room sensor will produce the same alarm.	Incorrect configuration of external room sensor.	Check setting in Service/ System settings/ Heating / Cooling/ Heating circuit 2/ Remote control type.
						Broken room sensor.	The room sensor must be replaced.
3093	A11 A63	Customer	Room temperature sensor error		The resistance thermometer inside the room sensor for heating circuit 3 is defective. (EMS communication is working.) An incorrect configuration of the room sensor will produce the same alarm.	Incorrect configuration of external room sensor.	Check setting in Service/ System settings/ Heating / Cooling/ Heating circuit 3/ Remote control type.
						Broken room sensor.	The room sensor must be replaced.
3094	A11 A64	Customer	Room temperature sensor error		The resistance thermometer inside the room sensor for heating circuit 4 is defective. (EMS communication is working.) An incorrect configuration of the room sensor will produce the same alarm.	Incorrect configuration of external room sensor.	Check setting in Service/ System settings/ Heating / Cooling/ Heating circuit 4/ Remote control type.
						Broken room sensor.	The room sensor must be replaced.

SOLARPLAZA
Solarsystemen und Wärmepumpen

BOSCH Compress 5800i AW12 OR-T ·erhältlich bei solarplaza.at

Error Code	Display Code(s)	Display Level	Alarm Text	Buzzer	Alarm Definition	Possible Cause	Action
3102	A32	Customer	No communication between remote control and htg zone mod		A setpoint for the supply temperature is periodically broadcasted from the HMI to the 2nd heating circuit. The error indicates that the setpoint was not refreshed/received within 4 min. For a circuit configured for heating or heating/cooling, a fixed supply temperature setpoint of 30°C is used as a fallback option during the interruption. If the circuit is configured for cooling only, mixing valve VC1 closes and circuit pump PC2 is turned off. The alarm is automatically reset when communication is re-established.	Incorrect pairing of room sensor and mixing module (or emulated mixing module, if circuit is controlled from XCU-THH).	Ensure that the address settings of the mixing module and the control unit have been selected correctly.
						Broken EMS connection between room sensor and mixing module.	Check cable and connections. Replace cable if necessary.
3111	A11	Customer	Configuration error: Incorrect remote control		The alarm is given if a room sensor was previously acknowledged for circuit 1, but it is later replaced with another room sensor type with hygrometer - or vice versa.	The alarm is given if a room sensor was previously acknowledged, but it is later replaced with another room sensor type with hygrometer - or vice versa.	Service >> System settings >> Start system analysis. It automatically identifies the type of room sensor used.
3112	A11	Customer	Configuration error: Incorrect remote control		The alarm is given if a room sensor was previously acknowledged for circuit 2, but it is later replaced with another room sensor type with hygrometer - or vice versa.	The alarm is given if a room sensor was previously acknowledged, but it is later replaced with another room sensor type with hygrometer - or vice versa.	Service >> System settings >> Start system analysis. It automatically identifies the type of room sensor used.
3113	A11	Customer	Configuration error: Incorrect remote control		The alarm is given if a room sensor was previously acknowledged for circuit 3, but it is later replaced with another room sensor type with hygrometer - or vice versa.	The alarm is given if a room sensor was previously acknowledged, but it is later replaced with another room sensor type with hygrometer - or vice versa.	Service >> System settings >> Start system analysis. It automatically identifies the type of room sensor used.
3114	A11	Customer	Configuration error: Incorrect remote control		The alarm is given if a room sensor was previously acknowledged for circuit 4, but it is later replaced with another room sensor type with hygrometer - or vice versa.	The alarm is given if a room sensor was previously acknowledged, but it is later replaced with another room sensor type with hygrometer - or vice versa.	Service >> System settings >> Start system analysis. It automatically identifies the type of room sensor used.
3121	A31	Customer	Temperature limiter triggered		The alarm is given by the mixing module MM100 for circuit 1, if its MC1 input is open. It is possible to install a temperature guard which breaks up the connection over MC1 when the temperature is too high.	High temperature.	Check the function of the mixing valve and mixing module. Check the cut-off threshold for the temperature guard.
						Intermittent connection in cabling between temperature guard and MC1 input of MM100.	Check the cabling for continuity.
3122	A32	Customer	Temperature limiter triggered		The alarm is given by the mixing module MM100 for circuit 2, if its MC1 input is open. It is possible to install a temperature guard which breaks up the connection over MC1 when the temperature is too high.	High temperature.	Check the function of the mixing valve and mixing module. Check the cut-off threshold for the temperature guard.
						Intermittent connection in cabling between temperature guard and MC1 input of MM100.	Check the cabling for continuity.

SOLARPLAZA
Solarsystemen und Wärmepumpen

BOSCH Compress 5800i AW12 OR-T ·erhältlich bei solarplaza.at

Error Code	Display Code(s)	Display Level	Alarm Text	Buzzer	Alarm Definition	Possible Cause	Action
3123	A33	Customer	Temperature limiter triggered		The alarm is given by the mixing module MM100 for circuit 3, if its MC1 input is open. It is possible to install a temperature guard which breaks up the connection over MC1 when the temperature is too high.	High temperature.	Check the function of the mixing valve and mixing module. Check the cut-off threshold for the temperature guard.
						Intermittent connection in cabling between temperature guard and MC1 input of MM100.	Check the cabling for continuity.
3124	A34	Customer	Temperature limiter triggered		The alarm is given by the mixing module MM100 for circuit 4, if its MC1 input is open. It is possible to install a temperature guard which breaks up the connection over MC1 when the temperature is too high.	High temperature.	Check the function of the mixing valve and mixing module. Check the cut-off threshold for the temperature guard.
						Intermittent connection in cabling between temperature guard and MC1 input of MM100.	Check the cabling for continuity.
3141	A21	Customer	Humidity sensor faulty		Sensor for relative humidity is faulty in the room sensor for circuit 1.	Sensor for relative humidity is faulty in the room sensor.	Replace room sensor.
3142	A22	Customer	Humidity sensor error		Sensor for relative humidity is faulty in the room sensor for circuit 2.	Sensor for relative humidity is faulty in the room sensor.	Replace room sensor.
3143	A23	Customer	Humidity sensor error		Sensor for relative humidity is faulty in the room sensor for circuit 3.	Sensor for relative humidity is faulty in the room sensor.	Replace room sensor.
3144	A24	Customer	Humidity sensor error		Sensor for relative humidity is faulty in the room sensor for circuit 4.	Sensor for relative humidity is faulty in the room sensor.	Replace room sensor.
3161	A21	Customer	Battery low		The battery level of the wireless room sensor for heating circuit 1 is low.	Low battery level.	Replace batteries. CR 20 RF / RC 120 RF / TR 120 RF uses 2x 1.5V LR03/AAA.
3162	A22	Customer	Battery low		The battery level of the wireless room sensor for heating circuit 2 is low.	Low battery level.	Replace batteries. CR 20 RF / RC 120 RF / TR 120 RF uses 2x 1.5V LR03/AAA.
3163	A23	Customer	Battery low		The battery level of the wireless room sensor for heating circuit 3 is low.	Low battery level.	Replace batteries. CR 20 RF / RC 120 RF / TR 120 RF uses 2x 1.5V LR03/AAA.
3164	A24	Customer	Battery low		The battery level of the wireless room sensor for heating circuit 4 is low.	Low battery level.	Replace batteries. CR 20 RF / RC 120 RF / TR 120 RF uses 2x 1.5V LR03/AAA.
3171	A71	Customer	Low batt. voltage in radio room temp. sensor in heat. circuit 1		The wireless room sensor for circuit 1 reports low battery level.	Low battery level.	Replace the battery in the wireless room sensor.
3181	A91	Customer	No signal from radio room temp. sensor for heating circuit 1		The wireless room sensor for circuit 1 has previously been installed, but it is no longer possible to establish a connection to it.	Low battery level in the wireless room sensor.	Measure the battery's voltage and replace it if the voltage is weak.
						The distance between the room sensor and the key is too long.	Experiment with placement of the wireless room sensor. Start by placing it close to the key, in order to verify the function. If connection cannot be established in that situation, the room sensor may be defective and needs to be replaced.

SOLAR PLAZA
Solarsystemen und Wärmepumpen

BOSCH Compress 5800i AW12 OR-T ·erhältlich bei solarplaza.at

Error Code	Display Code(s)	Display Level	Alarm Text	Buzzer	Alarm Definition	Possible Cause	Action
3221	A11	Customer	No valid dew point temperature available at heating circuit 1		The room controller for circuit 1 does not provide a valid dew point. Cooling operation for circuit is blocked.	The wrong type of room controller such as CR10 is used, which does not come with an integrated humidity sensor.	Change to a room controller which supports dew point calculation, such as CR10H, CR20RF, or RT800.
						The integrated humidity sensor in the room controller is defective.	Replace the room controller with a new one.
						The ambient air is particularly dry, so dry that the calculated dew point ends up below 0°C. A limitation of the software at the moment, is that a dew point below 0°C is currently not recognized as valid.	Wait for the humidity to go up.
3222	A11	Customer	No valid dew point temperature available at heating circuit 2		The room controller for circuit 2 does not provide a valid dew point. Cooling operation for circuit is blocked.	The wrong type of room controller such as CR10 is used, which does not come with an integrated humidity sensor.	Change to a room controller which supports dew point calculation, such as CR10H, CR20RF, or RT800.
						The integrated humidity sensor in the room controller is defective.	Replace the room controller with a new one.
						The ambient air is particularly dry, so dry that the calculated dew point ends up below 0°C. A limitation of the software at the moment, is that a dew point below 0°C is currently not recognized as valid.	Wait for the humidity to go up.
3223	A11	Customer	No valid dew point temperature available at heating circuit 3		The room controller for circuit 3 does not provide a valid dew point. Cooling operation for circuit is blocked.	The wrong type of room controller such as CR10 is used, which does not come with an integrated humidity sensor.	Change to a room controller which supports dew point calculation, such as CR10H, CR20RF, or RT800.
						The integrated humidity sensor in the room controller is defective.	Replace the room controller with a new one.
						The ambient air is particularly dry, so dry that the calculated dew point ends up below 0°C. A limitation of the software at the moment, is that a dew point below 0°C is currently not recognized as valid.	Wait for the humidity to go up.
3224	A11	Customer	No valid dew point temperature available at heating circuit 4		The room controller for circuit 4 does not provide a valid dew point. Cooling operation for circuit is blocked.	The wrong type of room controller such as CR10 is used, which does not come with an integrated humidity sensor.	Change to a room controller which supports dew point calculation, such as CR10H, CR20RF, or RT800.
						The integrated humidity sensor in the room controller is defective.	Replace the room controller with a new one.
						The ambient air is particularly dry, so dry that the calculated dew point ends up below 0°C. A limitation of the software at the moment, is that a dew point below 0°C is currently not recognized as valid.	Wait for the humidity to go up.

SOLAR PLAZA
Solarsystemen und Wärmepumpen

BOSCH Compress 5800i AW12 OR-T ·erhältlich bei solarplaza.at

Error Code	Display Code(s)	Display Level	Alarm Text	Buzzer	Alarm Definition	Possible Cause	Action
5100	--	Customer	Alarm 4-way valve can not switch to cooling or defrost mode	x	The software has given the command to switch the 4-way valve to cooling mode, but temperatures indicate that this has not occurred. Alarm is triggered when {TR3 > TR4} and {TC3 > TC0}, for more than 5 minutes. Heat pump operation is halted. Error requires manual reset (or that power is turned off and on).	Bad sensor reading or bad sensor positions.	Check that sensors are in their correct positions. Compare the temperature reading of each sensor with an external sensor. If a reading is incorrect, replace the corresponding sensor.
						Defective solenoid on 4-way valve, or bad cable connection.	Measure the resistance of the solenoid (coil). A resistance of 57-71 Ohm is to be expected. If it deviates greatly from that recommended value, replace the solenoid.
						Intermittent connection between XCU-SRH board and 4-way valve, or no control signal sent from the XCU-SRH board.	Activate function test for the heat pump. Check that the control signal at connection terminal VR4 shifts between 0 and 24 VDC during the test cycle.
						Seized/defective 4-way valve.	Replace 4-way valve.
						The compressor fails to deliver sufficient mass flow of refrigerant in order to assist proper switching of the 4-way valve.	Check pressure differential in refrigerant circuit while compressor is running. Replace compressor if found defective.
5101	--	Customer	Alarm 4-way valve cannot switch to heating mode	x	The software has given the command to switch the 4-way valve to heating mode, but temperatures indicate that this has not occurred. Alarm is triggered when {TR3 < TR4} and {TC3 < TC0}, for more than 5 minutes. Heat pump operation is halted. Error requires manual reset (or that power is turned off and on).	Bad sensor reading or bad sensor positions.	Check that sensors are in their correct positions. Compare the temperature reading of each sensor with an external sensor. If a reading is incorrect, replace the corresponding sensor.
						Defective solenoid on 4-way valve.	Measure the resistance of the solenoid (coil). A resistance of 57-71 Ohm is to be expected. If it deviates greatly from that recommended value, replace the solenoid.
						Intermittent connection between XCU-SRH board and 4-way valve, or no control signal sent from the XCU-SRH board.	Activate function test for the heat pump. Check that the control signal at connection terminal VR4 shifts between 0 and 24 VDC during the test cycle.
						Seized/defective 4-way valve.	Replace 4-way valve.
						The compressor fails to deliver sufficient mass flow of refrigerant in order to assist proper switching of the 4-way valve.	Check pressure differential in refrigerant circuit while compressor is running. Replace compressor if found defective.
5102	--	Installer	Info Pressure at high-pressure sensor JR1 in the refrigerant circuit is too high		JR1 > maximum condensing temperature (based on compressor envelope) for more than 2 s, while the compressor is running. Heat pump operation is halted. Error is cleared when the recovery condition is fulfilled.	Dirt in system filter/filterball valve SC1.	Clean the filter.
						Poor circulation in the heating/cooling system.	Ensure sufficient flow.
						Air in the heating/cooling system.	Vent the heating/cooling system. Fill up with water if needed.

SOLAR PLAZA
Solarsystemen und Wärmepumpen

BOSCH Compress 5800i AW12 OR-T ·erhältlich bei solarplaza.at

Error Code	Display Code(s)	Display Level	Alarm Text	Buzzer	Alarm Definition	Possible Cause	Action
5103	--	Customer	Alarm Pressure at high-pressure sensor JR1 in the refrigerant circuit too high several times	x	Error code 5102 or 5152 was triggered more than 2 times within the last 3 h, or was continuously active for more than 15 min. Heat pump operation is blocked. Error requires manual reset (or that power is turned off and on).	Dirt in system filter/filterball valve SC1.	Clean the filter.
						Poor circulation in the heating/cooling system.	Ensure sufficient flow.
						Air in the heating/cooling system.	Vent the heating/cooling system. Fill up with water if needed.
						Bad temperature readings from sensor TC3, TC0, T0, or TR6.	Compare the reading of each temperature sensor in the HMI with the reading from an external temperature sensor. Replace sensor if necessary.
						A switch of diverter valve VW1, from DHW to heating/cooling mode, has failed, causing am unexpected increase of working temperature and therefore pressure. A possible cause is that the control signal from the XCU-THH board does not reach VW1 because of a defective board.	Manually control the VW1 valve via function test from the HMI and ensure that the control signal is working. In its inactive state, the outputs between terminal A1-B1 and A2-B2 are fixed at 0VAC. Upon activation, pulsed 24V signals are sent to the stepper motor of VW1. Set your multimeter to VAC mode, and measure between A1-B1 and A2-B2 respectively. You should be able to pick up an erratic voltage reading above 0V at every switch between heating/cooling and DHW mode. If the signal remains steady at 0VAC during switches, replace the XCU-THH board.
						Actuator for diverter valve VW1 is responding to the control signal, but cannot perform the switch because the value has become stuck.	You should be able to hear a noise from the actuator when performing the switch via function test. Remove and clean/replace the valve.
						Actuator for diverter valve VW1 is defective.	If it has been ensured that there is a control signal coming from the XCU-THH board (in the previous test), and the actuator is not responding, replace the valve actuator.
						Circulation pump PC0 is defective.	It is likely that one of the circulation pump alarms is triggered if this is the case, giving hints about the root cause.

SOLAR PLAZA
Solarsystemen und Wärmepumpen

BOSCH Compress 5800i AW12 OR-T ·erhältlich bei solarplaza.at

Error Code	Display Code(s)	Display Level	Alarm Text	Buzzer	Alarm Definition	Possible Cause	Action
5104	--	Installer	Info Temperature at hot gas temperature sensor TR6 in the refrigerant circuit is too high		TR6 > 110°C for 5 s. Heat pump operation is halted. Error is automatically cleared when TR6 drops below 110°C.	Bad temperature reading from sensor TR6.	Use a thermometer to confirm proper function of the sensor.
						Suction gas superheating is too high. It is calculated through TR5-JR0, and controls the position of the EEV (electronic expansion valve) VR1. Therefore correct readings from these sensors are important.	Use a thermometer and manometer to confirm proper function of the sensors.
						Poor connection of control signal between XCU-SRH and EEV VR1.	Ensure proper connection.
						If neither JR0 or TR5 is bad, a possible cause is that EEV VR1 is not regulating properly.	Use a magnet to manually change position of the EEV during operation. This is to ensure that the valve has not seized.
5105	--	Customer	Alarm Temperature at hot gas temperature sensor TR6 in the refrigerant circuit has been too high several times	x	Error code 5104 was triggered more than 2 times within 3 h, or was continuously active for more than 15 min. Heat pump operation is halted. Error requires manual reset (or that power is turned off and on).	Bad temperature reading from sensor TR6.	Use a thermometer to confirm proper function of the sensor. Replace sensor if necessary.
						Suction gas superheating is too high. It is calculated through TR5-JR0, and controls the position of the EEV (electronic expansion valve) VR1. Therefore correct readings from these sensors are important.	Use a thermometer and manometer to confirm proper function of the sensors. Replace sensor if necessary.
						Poor connection of control signal between XCU-SRH and EEV VR1.	Ensure proper connection.
						If neither JR0 or TR5 is bad, a possible cause is that EEV VR1 is not regulating properly.	Use a magnet to manually change position of the EEV during operation. This is to ensure that the valve has not seized. Replace VR1 if necessary.
						Lack of refrigerant, either due to insufficient filling or due to leak.	Search for leak and repair if necessary. Refill refrigerant.
5106	--	Installer	Alarm Signal from air inlet temperature sensor TL2 at evaporator is outside the permissible range		TL2 > T1 + 3K for more than 2 minutes, while the fan is not running. Temperature reading from air inlet sensor TL2 is invalid. The control unit will use outdoor temperature T1 as a temporary internal placeholder temperature to allow continued heat pump operation. Error is automatically cleared when TL2 < T1 + 2K.	Defective sensor, broken/shorted sensor cable or bad connection to XCU-SRH board.	Establish proper connection. If the attempt is unsuccessful, disconnect sensor from XCU-SRH board and measure its resistance to check the integrity of the cable and sensor. Replace sensor if necessary.
						Bad evaluation of signal in XCU-SRH board.	If you have ensured that the sensor is working and is properly connected but the error persists, replace the XCU-SRH board.

SOLAR PLAZA
Solarsystemen und Wärmepumpen

BOSCH Compress 5800i AW12 OR-T ·erhältlich bei solarplaza.at

Error Code	Display Code(s)	Display Level	Alarm Text	Buzzer	Alarm Definition	Possible Cause	Action
5107	--	Customer	Alarm Signal from temperature sensor TA4 at the drain pan is outside the permissible range		Invalid temperature reading from drip pan sensor TA4. Error code is automatically cleared when the temperature reading is valid.	Defective sensor, broken/shorted sensor cable or bad connection to XCU-SRH board.	Establish proper connection. If the attempt is unsuccessful, disconnect sensor from XCU-SRH board and measure its resistance to check the integrity of the cable and sensor. Replace sensor if necessary.
						Bad evaluation of signal in XCU-SRH board.	If you have ensured that the sensor is working and is properly connected but the error persists, replace the XCU-SRH board.
5108	--	Installer	Info Signal from temperature sensor TR1 at the compressor is outside the permissible range		Invalid temperature reading from the the compressor body temperature sensor TR1. Heat pump operation is halted. The error code is automatically cleared when the temperature reading is valid.	Defective sensor, broken/shorted sensor cable or bad connection to XCU-SRH board.	Establish proper connection. If the attempt is unsuccessful, disconnect sensor from XCU-SRH board and measure its resistance to check the integrity of the cable and sensor.
5109	--	Customer	Info Signal from temperature sensor TR1 at the compressor is outside the permissible range several times	x	Error code 5108 was triggered more than 2 times within 3 hours, or has been active for more than 15 min. Heat pump operation is halted. The error code is automatically cleared when the temperature reading is valid.	Defective sensor, broken/shorted sensor cable or bad connection to XCU-SRH board.	Establish proper connection. If the attempt is unsuccessful, disconnect sensor from XCU-SRH board and measure its resistance to check the integrity of the cable and sensor. Replace sensor if necessary.
						Bad evaluation of signal in XCU-SRH board.	If you have ensured that the sensor is working and is properly connected but the error persists, replace the XCU-SRH board.
5110	--	Customer	Alarm Signal from temperature sensor TR3 for heating mode on the refrigerant condensate hose is outside the permissible range		Temperature reading from TR3, on the liquid pipe, is invalid and JR0 > -25°C. Error is automatically cleared when the temperature reading is valid.	Defective sensor TR3, broken/shorted sensor cable or bad connection to XCU-SRH board.	Establish proper connection. If the attempt is unsuccessful, disconnect sensor TR3 from XCU-SRH board and measure its resistance to check the integrity of the cable and sensor. Replace sensor TR3 if necessary.
						Bad evaluation of signal in XCU-SRH board.	If you have ensured that TR3 is working and is properly connected but the error persists, replace the XCU-SRH board.

SOLAR PLAZA
Solarsystemen und Wärmepumpen

BOSCH Compress 5800i AW12 OR-T ·erhältlich bei solarplaza.at

Error Code	Display Code(s)	Display Level	Alarm Text	Buzzer	Alarm Definition	Possible Cause	Action
5111	--	Installer	Alarm Signal from temperature sensor TC3 at the condenser is outside the permissible range		Temperature reading from TC3 is invalid. Error is automatically cleared when the temperature reading is valid.	Defective sensor, broken/shorted sensor cable or bad connection to XCU-SRH board.	Establish proper connection. If the attempt is unsuccessful, disconnect sensor from XCU-SRH board and measure its resistance to check the integrity of the cable and sensor.
5112	--	Customer	Alarm Signal from temperature sensor TR4 for cooling mode at the refrigerant liquid pipe is outside the permissible range		Temperature reading from TR4, on the liquid pipe, is invalid and JR0 > -25°C. Error is automatically cleared when the temperature reading is valid.	Defective sensor TR4, broken/shorted sensor cable or bad connection to XCU-SRH board.	Establish proper connection. If the attempt is unsuccessful, disconnect sensor TR4 from XCU-SRH board and measure its resistance to check the integrity of the cable and sensor. Replace sensor TR4 if necessary.
						Bad evaluation of signal in XCU-SRH board.	If you have ensured that the sensor TR4 is working and is properly connected but the error persists, replace the XCU-SRH board.
5113	--	Customer	Alarm Signal from temperature sensor TR5 on the compressor intake side is outside the permissible range	x	Temperature reading from TR5 is invalid. Heat pump operation is blocked. Error is automatically cleared when the temperature reading is valid.	Defective sensor, broken/shorted sensor cable or bad connection to XCU-SRH board.	Establish proper connection. If the attempt is unsuccessful, disconnect sensor from XCU-SRH board and measure its resistance to check the integrity of the cable and sensor. Replace sensor if necessary.
						Bad evaluation of signal in XCU-SRH board.	If you have ensured that the sensor is working and is properly connected but the error persists, replace the XCU-SRH board.
5114	--	Customer	Alarm Signal from temperature sensor TR6 on the discharge side of the compressor is outside the permissible range		Temperature reading from TR6 is invalid. When TR6 is bad, the control unit replaces its value internally with {TR1 + 15K}, which enables continued heat pump operation, although at limited performance. Error is automatically cleared when the temperature reading is valid.	Defective sensor, broken/shorted sensor cable or bad connection to XCU-SRH board.	Establish proper connection. If the attempt is unsuccessful, disconnect sensor from XCU-SRH board and measure its resistance to check the integrity of the cable and sensor. Replace sensor if necessary.
						Bad evaluation of signal in XCU-SRH board.	If you have ensured that the sensor is working and is properly connected but the error persists, replace the XCU-SRH board.

SOLAR PLAZA
Solarthermie und Wärmepumpen

BOSCH Compress 5800i AW12 OR-T ·erhältlich bei solarplaza.at

Error Code	Display Code(s)	Display Level	Alarm Text	Buzzer	Alarm Definition	Possible Cause	Action
5115	--	Installer	Info Signal from low-pressure sensor JR0 in the refrigerant circuit is outside the permissible range		Invalid signal (< 0.5 VDC) from low pressure sensor JR0. Heat pump operation is halted. Error is automatically cleared when the signal from JR0 is within approved range {0.5 .. 4.5} VDC.	Intermittent connection between XCU-SRH board and JR0.	Ensure proper connection.
5116	--	Customer	Info Signal from low-pressure sensor JR0 in the refrigerant circuit is outside the permissible range several times	x	Error code 5115 was triggered more than 2 times within the last 3 h, or was continuously active for more than 15 minutes. Heat pump operation is halted. Error requires manual reset (or that power is turned off and on).	Intermittent connection between XCU-SRH board and JR0.	Ensure proper connection.
						Broken or shorted cable between XCU-SRH board and pressure sensor JR0.	Repair or replace.
						Defective XCU-SRH board.	XCU-THH sends out 5 VDC to JR0 and receives a lower voltage back. That signal shall never drop below 0.5 VDC. If the voltage from XCU-THH is 5 VDC and JR0 is within approved range {0.5 .. 4.5} VDC, and the alarm persists, replace the XCU-SRH board.
						Defective low pressure sensor JR0.	If voltage from JR0 is lower than 0.5 VDC, replace JR0.
5117	--	Installer	Info Signal from high-pressure sensor JR1 in the refrigerant circuit is outside the permissible range		Invalid signal (> 4.5 VDC) from high pressure sensor JR1. Heat pump operation is halted. Error is automatically cleared when the signal from JR1 is within approved range {0.5 .. 4.5} VDC.	Temporary error in high pressure sensor JR1 or XCU-SRH board.	No action needed. If error is persistant, it will trigger the code 5118, which may justify replacement of a part.
5118	--	Customer	Alarm Signal from high-pressure sensor JR1 in the refrigerant circuit is outside the permissible range several times	x	Error code 5117 was triggered more than 2 times within the last 3 h, or was continuously active for more than 15 minutes. Heat pump operation is halted. Error requires manual rest (or that power is turned off and on).	Defective XCU-SRH board.	XCU-THH sends out 5 VDC to JR1 and receives a lower voltage back. That signal shall never go above 4.5 VDC. If the voltage from XCU-THH is 5 VDC and JR1 is within approved range {0.5 .. 4.5} VDC, and the alarm persists, replace the XCU-SRH board.
						Defective low pressure sensor JR1.	If voltage from JR1 is higher than 4.5 VDC, replace JR1.

SOLAR PLAZA
Solaranlagen und Wärmepumpen

BOSCH Compress 5800i AW12 OR-T ·erhältlich bei solarplaza.at

Error Code	Display Code(s)	Display Level	Alarm Text	Buzzer	Alarm Definition	Possible Cause	Action
5119	--	Installer	Info Inverter overcurrent error		The inverter registers an overcurrent to the compressor (> 42 A). Heat pump operation is halted. Error is cleared when the recovery condition is fulfilled.	Shorted cabling between the inverter and compressor.	Check cabling between inverter and compressor.
						Compressor is blocked. Possibly high back pressure during start attempt.	Equalize pressure in refrigerant circuit and attempt a restart.
5120	--	Customer	Alarm Inverter overcurrent error	x	Error code 5119 was triggered more than 10 times within 3 h, or was continuously active for more than 15 min. Heat pump operation is halted. Error is cleared through manual reset (or by cycling power).	Broken/shorted cabling between the inverter and compressor.	Check cabling between inverter and compressor.
						Compressor is blocked. Possibly high back pressure during start attempt.	Equalize pressure in refrigerant circuit and attempt a restart.
						Ground fault in compressor.	Measure the resistance between compressor windings and ground. It should be > 10 kOhm.
						Shorted motor winding inside compressor.	Measure the resistance between the windings. Note that resistance values are expected to be very small. The line-to-line resistance is 0.502 Ohm at 20°C (the resistance will vary with temperature). Ensure good connection surfaces while measuring and that your test equipment is sufficiently accurate.
						Compressor is blocked (locked rotor).	If pressure equalization was done and electric measurements indicated no error, while compressor still fails to start, replace compressor.
						Defective inverter.	If the error code is recurring and the other possible causes have already been checked, replace inverter.
5121	--	Installer	Info Control failure at compressor		Driving failure on compressor. Heat pump operation is blocked. Error is automatically cleared when the recovery condition is fulfilled.	High torque in compressor. (Locked rotor.)	At sporadic occurrences of the message, restart the appliance. Further actions should only be necessary if the problem is recurring. (See error code 5122 for more information.)
5122	--	Customer	Info Control failure at compressor	x	Error code 5121 was triggered more than 2 times within 3 h, or was continuously active for more than 15 minutes. Heat pump operation is blocked. Error is cleared through manual reset (or by cycling power).	Shorted or broken connection between inverter and compressor.	Check connection.
						Shorted or broken motor winding inside of compressor.	Measure the resistance between the compressor windings and ground. If resistance < 10 kOhm, replace the compressor.
						Locked rotor in compressor.	If all of the actions above has failed, high torque/locked rotor may justify a compressor replacement.
						Defective inverter.	Replace inverter.

SOLAR PLAZA
Solarthermie und Wärmepumpen

BOSCH Compress 5800i AW12 OR-T ·erhältlich bei solarplaza.at

Error Code	Display Code(s)	Display Level	Alarm Text	Buzzer	Alarm Definition	Possible Cause	Action
5123	--	Installer	Info Current consumption at compressor too high		Overcurrent in compressor. Heat pump operation is blocked. Error is cleared when the recovery condition is fulfilled.	High torque in compressor. (Locked rotor.)	At sporadic occurrences of the message, restart the appliance. Further actions should only be necessary if the problem is recurring. (See error code 5124 for more information.)
5124	--	Customer	Alarm Current consumption at compressor too high	x	Error code 5123 was triggered more than 2 times within 3 h, or was continuously active for more than 15 min. Heat pump operation is blocked. Error is cleared through manual reset (or by cycling power).	Shorted or broken motor winding inside of compressor.	Measure the resistance between the compressor windings and ground. If resistance < 10 kOhm, replace the compressor.
						Locked rotor in compressor.	If all of the actions above has failed, high torque/locked rotor may justify a compressor replacement.
						Defective inverter.	Replace inverter.
5125	--	Installer	Info Inverter overcurrent error		Inverter overcurrent. Heat pump operation is blocked. Error is cleared when the recovery condition is fulfilled.	Temporary overload or monitoring error in inverter.	Cycle power and perform a new start attempt.
5126	--	Customer	Alarm Inverter overcurrent error	x	Error code 5125 was triggered more than 2 times within 3 h, or was continuously active for more than 15 min. Heat pump operation is blocked. Error is cleared through manual reset (or by cycling power).	Defective inverter.	Replace inverter.
5127	--	Installer	Info Temperature of the inverter is too high		The inverter monitors its temperature internally and notifies the XCU-SRH board if the temperature is getting too high. The fan is started to cool down the inverter. Compressor operation is blocked. Error is automatically cleared when the temperature drops to a healthy level.	Cooling of the inverter may be limited due to the air duct of the ODU being blocked or soiled by deposits.	Ensure air flow through air duct. Clean heatsink on the underside of the inverter if necessary.
5128	--	Customer	Alarm Temperature of the inverter too high several times	x	Error code 5127 was triggered more than 2 times within 3 h, or was continuously active for more than 15 min. Heat pump operation is blocked. Error is cleared through manual reset (or by cycling power).	Cooling of the inverter may be limited due to the air duct of the ODU being blocked or soiled by deposits.	Ensure air flow through air duct. Clean heatsink on the underside of the inverter if necessary.
						Fan does not run.	Check for debris which may block rotation of the fan blades. Check voltage supply and signal cabling. Test fan by starting it in manual mode.
						Defective inverter, i.e. the internal temperature monitoring overestimates the temperature.	Replace inverter.

SOLAR PLAZA
Solarsystemen und Wärmepumpen

BOSCH Compress 5800i AW12 OR-T ·erhältlich bei solarplaza.at

Error Code	Display Code(s)	Display Level	Alarm Text	Buzzer	Alarm Definition	Possible Cause	Action
5129	--	Customer	Alarm Invalid inverter parameter settings	x	At initialization, the XCU-SRH board will prompt the inverter for a specific set of parameters for the compressor. The alarm is triggered if the particular configuration is not found in the inverter, or if the compressor does not respond as expected. Heat pump operation is blocked. Error is cleared when parametrization of the inverter is successful.	The far most likely cause is that the XCU-SRH board holds a SW for a different heat pump model/size, in which case the selected configuration is either not offered by the inverter, or is incompatible with the compressor.	Ensure that the correct XCU-SRH software is installed for the specific heat pump model.
						Wrong inverter installed or defective inverter.	Replace inverter if it's the wrong type for the specific heat pump model.
						Wrong compressor model installed in the ODU. (Only mentioned as a theoretical possibility.)	Ensure that the correct compressor is installed.
5130	--	Installer	Info Safety chain of the inverter interrupted		The high pressure guard MR1 and the thermal guard FE3 for the compressor, are connected in series on the same circuit, and are monitored by the inverter. The error is triggered when the circuit is open/broken. Heat pump operation is blocked. Error is automatically cleared when the circuit is closed/shorted.	The thermal guard FE3 on the compressor is not properly connected, or defective.	Check connection and function of thermal guard.
						High pressure switch MR1 in refrigerant circuit is not properly connected, or defective.	Check connection and function of MR1.
						No or poor flow through plate heat exchanger in refrigerant circuit.	Ensure proper flow.
						Incorrect reading from discharge temperature sensor TR6, at the compressor outlet. If the temperature reading is lower than the actual temperature, the compressor could run too hot and trigger the overtemperature guard.	Measure the actual discharge temperature with an external thermometer and compare its value to the value presented by the HMI. Replace TR6 if necessary.
						Bad connection of signal cabling to expansion valve VR1. If VR1 is unintentionally fully closed, it may cause MR1 to trip. (Mostly relevant for large chassis models.)	Check VR1 connection.
						Blocked expansion valve VR1. (Mostly relevant for large chassis models.)	Check function of VR1.
						Bad connection of signal cable to 4-way valve VR4. In very rare cases the valve can end up in a middle position where the flow is blocked.	Check cable connection.

SOLAR PLAZA
Solarsystemen und Wärmepumpen

BOSCH Compress 5800i AW12 OR-T ·erhältlich bei solarplaza.at

Error Code	Display Code(s)	Display Level	Alarm Text	Buzzer	Alarm Definition	Possible Cause	Action
5131	--	Customer	Alarm Safety chain of the inverter interrupted	x	Error code 5130 has been triggered more than 2 times within 3 hours, or has been continuously active for more than 15 minutes. For more info, see alarm definition for 5130. Heat pump operation is blocked. Error is cleared through manual reset (or by cycling power).	The thermal guard FE3 on the compressor is not properly connected, or defective.	Check connection and function of thermal guard.
						High pressure switch MR1 in refrigerant circuit is not properly connected, or defective.	Check connection and function of MR1.
						No or poor flow through plate heat exchanger in refrigerant circuit.	Ensure proper flow.
						Incorrect reading from discharge temperature sensor TR6, at the compressor outlet. If the temperature reading is lower than the actual temperature, the compressor could run too hot and trigger the overtemperature guard.	Measure the actual discharge temperature with an external thermometer and compare its value to the value presented by the HMI. Replace TR6 if necessary.
						Bad connection of signal cabling to expansion valve VR1. If VR1 is unintentionally fully closed, it may cause MR1 to trip. (Mostly relevant for large chassis models.)	Check VR1 connection.
						Blocked expansion valve VR1. (Mostly relevant for large chassis models.)	Check function of VR1.
						Bad connection of signal cable to 4-way valve VR4. In very rare cases the valve can end up in a middle position where the flow is blocked.	Check cable connection.
						Blocked expansion valve VR1. (Mostly relevant for large chassis models.)	Check function of VR1.
						Compressor is blocked (locked rotor).	Allow the pressure to equalize in the refrigerant circuit and make a new start attempt. If the rotor is still locked, replace compressor.
						4-way valve VR4 in refrigerant circuit is defective. In very rare cases the 4-way valve can end up in a middle position where flow is blocked.	Replace 4-way valve VR4.
						Internal error in inverter, i.e. the monitoring of the STO input falsely detects an open circuit when the circuit is actually closed.	Replace inverter.
5132	--	Customer	Alarm Internal inverter fault	x	This is an internal error triggered by the inverter. Heat pump operation is blocked. Error is cleared when the recovery condition is fulfilled.	Internal error in the program sequence of the inverter in the ODU.	Replace inverter.

SOLAR PLAZA
Solarsystemen und Wärmepumpen

BOSCH Compress 5800i AW12 OR-T ·erhältlich bei solarplaza.at

Error Code	Display Code(s)	Display Level	Alarm Text	Buzzer	Alarm Definition	Possible Cause	Action
5134	--	Customer	Alarm Inverter communication fault	x	No Modbus communication between XCU-SRH board and inverter. Heat pump operation is blocked. Error is cleared when the recovery condition is fulfilled.	Bad connection of Modbus cabling between XCU-SRH and inverter.	Check an reattach connecting plugs on XCU-SRH board and inverter. If error persists, replace the Modbus cable.
						Internal error in XCU-SRH board, with regards to Modbus communication.	Replace XCU-SRH board.
						Bad connection between Modbus cabling between XCU-SRH and fan.	Check an reattach connecting plugs on XCU-SRH board and fan. If error persists, replace the Modbus cable.
5135	--	Customer	Alarm Undervoltage at power supply for inverter	x	Alarm is generated by the inverter in the ODU when it detects a supply voltage lower than 196 VAC. Heat pump operation is blocked. Error is cleared when the voltage level is within normal range.	Bad connection of voltage supply to inverter.	Ensure proper connection.
						If the alarm persists, the voltage of the power grid may occasionally be too low.	Contact the electricity supplier and perform a logged measurement of the voltage. The sampling interval needs to be shorter than the delay defined for this alarm.
5136	--	Customer	Alarm Overvoltage at power supply for inverter	x	Alarm is generated by inverter upon detecting too high input voltage. Heat pump operation is blocked. Error is cleared when the voltage level is within normal range.	Temporary voltage surge for more than 30 s in electrical installation.	Contact the electricity supplier and perform a logged measurement of the voltage. The sampling interval needs to be shorter than the delay defined for this alarm.
5137	--	Customer	Alarm Phase monitoring has triggered	x	One phase to the inverter is missing, or the phase sequence is reversed. The error code is applicable only for large chassis ODUs. Heat pump operation is blocked. Error is cleared when the phases are properly connected.	One phase is missing.	Measure the voltage between each phase and neutral. Ensure proper connections to inverter.
						Phase sequence is reversed.	Switch two of the three phases to the inverter. (Any pair will do - L1 and L2, or L2 and L3, or L1 and L3.)
5138	--	Installer	Info Fault in fan of heat pump		The fan has sent an alarm via Modbus. Heat pump operation is blocked. Error is cleared when alarm is no longer sent.	Fan in ODU is mechanically jammed and/or overheated.	Remove any debris that may be blocking rotation of the fan blades.
						Bad connection of Modbus signal between XCU-SRH board and fan.	Check connections.
						Bad connection of 230 VAC voltage supply to fan.	Check connections.
5139	--	Customer	Alarm Fault in fan of heat pump	x	Error code 5138 has been triggered more than 2 times within 3 hours, or has been continuously active for more than 15 minutes. Heat pump operation is blocked. Error is cleared through manual reset (or by cycling power).	Fan in ODU is mechanically jammed and/or overheated.	Remove any debris that may be blocking rotation of the fan blades.
						Bad connection of Modbus signal between XCU-SRH board and fan.	Check connections.
						Bad connection of 230 VAC voltage supply to fan.	Check connections.
						Fan is defective.	Replace fan.

SOLAR PLAZA
Solarsysteme und Wärmepumpen

BOSCH Compress 5800i AW12 OR-T ·erhältlich bei solarplaza.at

Error Code	Display Code(s)	Display Level	Alarm Text	Buzzer	Alarm Definition	Possible Cause	Action
5140	--	Installer	Info Risk of freezing in the condenser in cooling or defrosting mode		Low pressure sensor JR0 < 0°C and {heat carrier outlet sensor TC3 < 4°C in cooling mode, or TC3 < 8°C in defrost mode, or the water flow through the condenser is too low}, for 10 s. (A minimum water flow at the actual heat carrier temperature is calculated by the ODU.) Compressor operation is blocked. Error is automatically cleared when the error condition is no longer fulfilled.	Insufficient or no circulation in heat transfer system/heating system.	Check adjustment valves/radiator thermostats.
						Dirt in system filter/filterball valve.	Clean the filter.
						Air in heat transfer system/heating system.	De-air the heating system. Fill up with water.
						The available amount of energy bound in the heating carrier is insufficient for a defrost.	Extend the volume of the heat carrier by opening one or more closed circuits, or by adding a buffer cylinder to the system. Sometimes an alternative solution is to raise the maximum power for the additional heater.
5141	--	Customer	Alarm Risk of freezing in the condenser in cooling or defrost mode	x	Error code 5140 was triggered 2 times within 3 h. Compressor operation is blocked. Error is cleared through manual reset (or by cycling power).	Insufficient or no circulation in heat transfer system/heating system.	Check adjustment valves/radiator thermostats.
						Dirt in system filter/filterball valve.	Clean the filter.
						Air in heat transfer system/heating system.	De-air the heating system. Fill up with water.
						The available amount of energy bound in the heating carrier is insufficient for a defrost.	Extend the volume of the heat carrier by opening one or more closed circuits, or by adding a buffer cylinder to the system. Sometimes an alternative solution is to raise the maximum power for the additional heater.
						Pressure sensor JR0 provides a bad reading.	Connect pressure gauge to refrigerant circuit for confirmation. Replace pressure sensor JR0 if necessary.
5142	--	Installer	Info Emergency operation of refrigerant circuit for device frost protection active		TC3 < 3°C for more than 60 s, when the compressor is not running. The compressor is started in heating mode to protect the plate heat exchanger from freezing. The system is still operational but a more critical error might be expected in the future. Error is cleared through manual reset (or by cycling power).	Insufficient or no circulation in hydraulic system.	Ensure proper flow. Check particle filter and valves.

SOLAR PLAZA
Solarsysteme und Wärmepumpen

BOSCH Compress 5800i AW12 OR-T ·erhältlich bei solarplaza.at

Error Code	Display Code(s)	Display Level	Alarm Text	Buzzer	Alarm Definition	Possible Cause	Action
5143	--	Customer	Alarm Flow and return between indoor and outdoor unit interchanged	x	Heat pump is in heating/DHW mode and the heat carrier temperature delta in the plate heat exchanger appears to be inverted. (TC0 + 1K) > TC3 and JR1 > (TC3 + 10K) and TC3 < 30°C, for more than 60 s. Heat pump operation is blocked. Error is cleared through manual reset (or by cycling power).	Hoses for flow and return between the heat pump and indoor unit have been mixed up.	Install hoses on the right connections.
						Defective sensor TC3 or TC0.	Check placement of sensors. Compare displayed temperatures for TC3 and TC0 with an external thermometer on these positions. Replace sensor(s) if deviations are found.
5145	--	Customer	Alarm Refrigerant charge too low	x	Any of the temperatures {TR3, TR4, TR5, TR6, TL2, TA4} is more than 10K higher than both JR0 and JR1. The condition for this alarm is checked after pressure equalization. (Since XCU-SRH v7.6.0, sensors which are defective and uses internal placeholder values, are ignored in the alarm condition. If JR0 or JR1 is invalid, the alarm is disabled.) Heat pump operation is blocked. Error is cleared through manual reset (or by cycling power).	Possibly too low refrigerant filling, or a leak in the refrigerant circuit. Typical areas to focus on are filling/evacuation valves, solder joints in refrigerant circuit, evaporator (fan coil).	Use a leak detector to locate the leak. Evacuate, repair and/or refill.
5146	--	Installer	Info Refrigerant charge too high		{JR1 > TC3 + 5K} and {subcooling is more than 5K higher than the setpoint} when refrigerant circuit runs in heating direction. Error is automatically cleared when temperatures are back to normal.	Permissible fill volume for refrigerant in the outdoor unit has been exceeded	Check refrigerant filling. (If refilling is required, remember to activate the "evacuation/fill" function.)
						VR0 is not regulating.	Ensure proper cable connection for VR0.
5147	--	Installer	Info Defrost failed		If an active or super defrost cannot be completed within 15 minutes, the event is memorized by the controller. The error is triggered if there are more than 3 of those events in a row. Error is cleared when a defrost is successfully completed.	Too low volume or temperature of heating system.	Open more thermostats on the heating system.
						The ODU is installed in a very windy location.	Consider setting up some sort of wind protection.
						Possibly too low refrigerant filling, or a leak in the refrigerant circuit. Typical areas to focus on are filling/evacuation valves, solder joints in refrigerant circuit, evaporator (fan coil).	Use a leak detector to locate the leak. Evacuate, repair and/or refill.

SOLAR PLAZA
Solaranlagen & Wärmepumpen

BOSCH Compress 5800i AW12 OR-T ·erhältlich bei solarplaza.at

Error Code	Display Code(s)	Display Level	Alarm Text	Buzzer	Alarm Definition	Possible Cause	Action
5148	--	Customer	Alarm Evaporation temperature too low (Heating Mode)	x	Error code 5154 or 5182 was triggered more than 2 times within 3 h, or was continuously active for more than 15 minutes. Compressor operation is blocked. Error is cleared through manual reset (or by cycling power).	Fins on the air coil heat exchanger is contaminated with dirt.	Clean air coil heat exchanger.
						Servo motor on electronic expansion valve VR1 is not properly mounted on the lower part of the valve.	Check position.
						Servo motor on electronic expansion valve VR1 is defective.	For information about troubleshooting the expansion valve, see separate section in service manual.
						Electronic expansion valve VR1 in refrigerant circuit is defective (jammed).	For information about troubleshooting the expansion valve, see separate section in service manual.
5149	--	Customer	Alarm Condensation temperature too high (Cooling Mode)	x	Error code 5102 or 5152 was triggered more than 2 times within 3 h, or was continuously active for more than 15 minutes. Compressor operation is blocked. Error is cleared through manual reset (or by cycling power).	Air coil heat exchanger in refrigerant circuit, is contaminated with dirt, thus preventing proper air flow.	Clean air coil heat exchanger.
						Fan is not running properly.	Check function of fan.
5150	--	Customer	Alarm Condensation temperature too high (cooling mode)	x	Error code 5130 was triggered more than 2 times within 3 h, or was continuously active for more than 15 minutes. Heat pump operation is blocked. Error is cleared through manual reset (or by cycling power).	Air coil heat exchanger in refrigerant circuit, is contaminated with dirt, thus preventing proper air flow.	Clean air coil heat exchanger.
						Fan is not running properly.	Check function of fan.
5151	--	Installer	Info Condensation temperature too low		Condensation temperature is too low (exceeded compressor envelope limit). Heat pump operation is blocked. Error is automatically cleared when the recovery condition is fulfilled.	Cold hydraulic circuit, for instance when commissioning a new installation where the system was just filled with cold water.	Allow the electric heater to raise the temperature of the hydraulic system. The heat pump will perform a new start attempt.
						In older software versions, the error is allowed to trigger also during frost protection. Since XCU-SRH software v9.6.0/9.6.1, the error code is disabled during frost protection.	Updating the XCU-SRH (ODU) software to v9.6.0/9.6.1 can help to reduce unnecessary alarms.
5152	--	Installer	Info Condensation temperature too high		Condensation temperature is too high (exceeded compressor envelope limit). Heat pump operation is blocked. Error is automatically cleared when the recovery condition is fulfilled.	Dirt in system filter/filterball valve SC1.	Clean the filter.
						Poor circulation in the heating/cooling system.	Ensure sufficient flow.
						Air in the heating/cooling system.	Vent the heating/cooling system. Fill up with water if needed.

BOSCH Compress 5800i AW12 OR-T ·erhältlich bei solarplaza.at

Error Code	Display Code(s)	Display Level	Alarm Text	Buzzer	Alarm Definition	Possible Cause	Action
5154	--	Installer	Info Pressure at low pressure sensor JR0 too low		Low pressure temperature JR0 is lower than the allowed minimum, based on the compressor envelope, for 30 s. Heat pump operation is blocked. Error is automatically cleared when the recovery condition is fulfilled.	Fins on the air coil heat exchanger are contaminated with dirt.	Clean air coil heat exchanger.
						Servo motor on electronic expansion valve VR1 is not properly mounted on the lower part of the valve.	Check position.
						Servo motor on electronic expansion valve VR1 is defective.	For information about troubleshooting the expansion valve, see separate section in service manual.
						Electronic expansion valve VR1 in refrigerant circuit is defective (jammed).	For information about troubleshooting the expansion valve, see separate section in service manual.
5155	--	Customer	Alarm Pressure at low pressure sensor JR0 too low (Cooling mode)	x	Error code 5154 or 5182 was triggered more than 2 times within 3 h, or was continuously active for more than 15 min. Heat pump operations is blocked. Error is cleared through manual reset (or by cycling power).	Circulation too low through plate heat exchanger.	Ensure sufficient flow. Check filters and valves.
						Servo motor on electronic expansion valve VR1 is not properly mounted on the lower part of the valve.	Check position.
						Servo motor on electronic expansion valve VR1 is defective.	For information about troubleshooting the expansion valve, see separate section in service manual.
						Electronic expansion valve VR1 in refrigerant circuit is defective (jammed).	For information about troubleshooting the expansion valve, see separate section in service manual.
5156	--	Customer	Alarm Evaporation temperature too high	x	Low pressure temperature is higher than the allowed maximum, based on the compressor envelope, for 30 s. Heat pump operation is blocked. Error is automatically cleared when the recovery condition is fulfilled.	Servo motor on electronic expansion valve VR1 is not properly mounted on the lower part of the valve.	Check position.
						Servo motor on electronic expansion valve VR1 is defective.	For information about troubleshooting the expansion valve, see separate section in service manual.
						Electronic expansion valve VR1 in refrigerant circuit is defective (jammed).	For information about troubleshooting the expansion valve, see separate section in service manual.
5157	--	Installer	Info Superheat of refrigerant too low		Discharge superheat (TR6-JR1) < 30K, and suction superheat (TR5-JR0) < 1K, for 3 min. Heat pump operation is blocked. Error is cleared when the condition is no longer fulfilled.	Motor on expansion valve VR1 is not properly mounted.	Check position of motor.
						Improvements were introduced to the refrigerant circuit control logic since XCU-SRH software v7.6.0, which decrease the risk of triggering this alarm.	Upgrading the software of the XCU-SRH board to the latest version can be beneficial.

SOLAR PLAZA
Solarsystemen und Wärmepumpen

BOSCH Compress 5800i AW12 OR-T ·erhältlich bei solarplaza.at

Error Code	Display Code(s)	Display Level	Alarm Text	Buzzer	Alarm Definition	Possible Cause	Action
5158	--	Customer	Alarm Superheat of refrigerant too low	x	Error code 5157 was triggered more than 2 times within 3 h, or was continuously active for more than 15 min. Heat pump operation is blocked. Error is cleared through manual reset (or by cycling power).	Motor on expansion valve VR1 is not properly mounted.	Check position of motor.
						Improvements were introduced to the refrigerant circuit control logic since XCU-SRH software v7.6.0, which decrease the risk of triggering this alarm.	Upgrading the software of the XCU-SRH board to the latest version can be beneficial.
						Motor on expansion valve VR1 is defective.	See separate section in service manual about troubleshooting the expansion valve. Replace expansion valve motor if necessary.
						Expansion valve VR1 has become jammed.	See separate section in service manual about troubleshooting the expansion valve. Replace expansion valve if necessary.
5159	--	Installer	Info Superheat of refrigerant too high		From XCU-SRH v7.6.0: Suction superheat (TR5-JR0) > (suction gas superheat setpoint + 10K) for 15 min. Before XCU-SRH v7.6.0: Suction gas superheat (TR5-JR0) > 10K for 15 min. Error is automatically cleared when the condition is no longer fulfilled.	Motor on expansion valve VR1 is not properly mounted.	Check position of motor.
5160	--	Customer	Alarm Heater in the drain pan not working	x	At the end of a defrost, the drip tray heater remains on for 45 min, during which the drip tray temperature TA4 is compared to air inlet temperature TL2. The alarm is triggered if TA4 does not exceed {TL2 + 1.5K} during this time for 3 consecutive defrosts. Error is cleared through manual reset (or by cycling power).	Bad reading from drip tray temperature sensor TA4, due to poor position, or defect. Insulation for sensor could be missing.	Ensure proper position and attachment with clip. Ensure that the insulation foam strip on top of the sensor is installed. Replace sensor if found defective. Activate the drip pan heater in manual mode afterwards to ensure that the TA4 temperature is rising compared to TL2.
						Fuse F1 for voltage supply of the drip tray heater and heating cable in the terminal box is broken.	Replace fuse. Check for possible shorted circuit first.
						Bad relay for drip tray heater, missing output signal (terminal EA0/O70) from XCU-SRH board, or bad connection between relay and drip tray heater.	Activate drip tray heater in manual mode. Look for bad connection along the signal chain. Ensure 24 VDC voltage between EA0/O70 terminal and relay, and then 230VAC from the relay.
						Shorted/defective drip tray heater. Sometimes a darker discolaration of the heater can be seen if this is the case.	Power off the appliance. Disconnect the drip tray heater and measure its resistance. The expected value is 622 Ohm for 4, 5, and 7 kW ODUs, and 472 Ohm for 10 and 12 kW ODUs. Replace the drip tray heater if the deviation is greater than +/-10%.

SOLAR PLAZA
Solaranlagen und Wärmepumpen

BOSCH Compress 5800i AW12 OR-T ·erhältlich bei solarplaza.at

Error Code	Display Code(s)	Display Level	Alarm Text	Buzzer	Alarm Definition	Possible Cause	Action
5161	--	Customer	Alarm No pressure build-up during compressor operation	x	Error code 5184 was triggered more than 2 times within 3 h. Heat pump operation is blocked. Error is cleared through manual reset (or by cycling power).	Electronic expansion valve VR1 has become stuck in open position.	Check that servo motor is properly attached on the valve. Refer to separate section in service manual about testing the expansion valve.
						4-way valve VR4 in refrigerant circuit has become jammed in a middle position, causing an unintentional pressure equalization.	Check electrical connection and signal to solenoid on valve. Attempt to switch it back and forth in manual operation.
						Low pressure sensor JR0 gives an incorrect reading.	Check actual pressure with pressure gauge.
						High pressure sensor JR1 gives an incorrect reading.	Check actual pressure with pressure gauge.
5162	--	Installer	Info Pressure difference between high and low pressure side too low for switching operation of the 4-way valve		The pressure differential between high pressure side (JR1) and low pressure side (JR0) was less than 1 bar, for 100 s. Heat pump operation is blocked. Error is automatically cleared when the compressor has returned to idle state.	Expansion valve VR1 unintentionally stays in open position. Motor may be improperly mounted. Possible bad connection between XCU-SRH board and VR1 motor.	Check position of motor. Check electrical connection to board.
						4-way valve VR4 in refrigerant circuit has become jammed in a middle position, causing an unintentional pressure equalization.	Check electrical connection and signal to solenoid on valve. Attempt to switch it back and forth in manual operation.
5163	--	Customer	Alarm Pressure difference between high and low pressure side too low for switching process of the 4-way valve	x	Error code 5162 was triggered more than 2 times within 3 h, or was continuously active for more than 15 min. "Function is disabled." Error is cleared through manual reset (or by cycling power).	Expansion valve VR1 unintentionally stays in open position. Motor may be improperly mounted. Possible bad connection between XCU-SRH board and VR1 motor.	Check position of motor. Check electrical connection to board.
						4-way valve VR4 in refrigerant circuit has become jammed in a middle position, causing an unintentional pressure equalization.	Check electrical connection and signal to solenoid on valve. Attempt to switch it back and forth in manual operation.
						Low pressure sensor JR0 gives an incorrect reading.	Check actual pressure with pressure gauge. Replace JR0 if necessary.
						High pressure sensor JR1 gives an incorrect reading.	Check actual pressure with pressure gauge. Replace JR1 if necessary.
						VR1 expansion valve is defective (jammed valve or defective motor).	Replace VR1.

SOLAR PLAZA
Solarsystemen und Wärmepumpen

BOSCH Compress 5800i AW12 OR-T ·erhältlich bei solarplaza.at

Error Code	Display Code(s)	Display Level	Alarm Text	Buzzer	Alarm Definition	Possible Cause	Action
5164	--	Installer	Info Air flow through the evaporator too low		During heating or cooling operation, a fan load factor is being calculated based on the relation between supplied power and actual speed. The fan load factor is high when the actual speed is relatively low in relation to supplied power. Under non-frosting conditions (JR0 > 0°C), the alarm is triggered in either operating mode, when the load factor is high. Under frosting conditions (JR0 <= 0°C): Alarm is triggered when heating mode is active, and less than 15 min have passed since the previous defrost, and the load factor is high. Error is cleared when the recovery condition is fulfilled.	Evaporator is contaminated with dirt.	Clean evaporator.
						Dirt deposits on fan blades.	Clean fan.
						Minimum clearance between ODU and wall of building is undercut.	See installation manual for placement requirements.
5168	--	Customer	Info Pressure equalization failed		Pressure equalization is initiated to prepare for start-up and standstill. The error is triggered if equalization was not completed within 3 min. Heat pump operation is blocked. Manual reset is not possible. Error is automatically cleared when pressure equalization is completed.	Low pressure sensor JR0 gives an incorrect reading.	Use a manometer to confirm proper function of the sensor.
						High pressure sensor JR1 gives an incorrect reading.	Use a manometer to confirm proper function of the sensor.
						EEV (electronic expansion valve) VR1 does not regulate properly. If the issue is related to the EEV, one can expect additional error codes such as 5157, 5158, 5159.	Check position of motor on EEV. Use a magnet to manually change position of the EEV during operation. This is to ensure that the valve has not seized.
5169	--	Customer	Alarm Pressure equalization failed		Error code 5168 was triggered 3 times within 3 h, or was continuously active for more than 15 min. Heat pump operation is blocked. Error is cleared through manual reset (or by cycling power).	Low pressure sensor JR0 gives an incorrect reading.	Use a manometer to confirm proper function of the sensor. Replace if necessary.
						High pressure sensor JR1 gives an incorrect reading.	Use a manometer to confirm proper function of the sensor. Replace if necessary.
						EEV (electronic expansion valve) VR1 does not regulate properly. If the issue is related to the EEV, one can expect additional error codes such as 5157, 5158, 5159.	Check position of motor on EEV. Use a magnet to manually change position of the EEV during operation. This is to ensure that the valve has not seized.

SOLAR PLAZA
Solaranlagen und Wärmepumpen

BOSCH Compress 5800i AW12 OR-T ·erhältlich bei solarplaza.at

Error Code	Display Code(s)	Display Level	Alarm Text	Buzzer	Alarm Definition	Possible Cause	Action
5170	--	Customer	Alarm Faulty communication with fan		Modbus communication between XCU-SRH board and fan is broken for more than 10 s. Heat pump operation is blocked. Manual reset is not possible. Error is automatically cleared when Modbus communication is resumed.	Poor Modbus connection between XCU-SRH and fan.	Ensure proper connection.
5171	--	Customer	Alarm Signal from air inlet temperature sensor TL2 at evaporator is outside the permissible range	x	Invalid temperature reading from air inlet temperature sensor TL2. Heat pump operation is blocked. Error is automatically cleared when temperature reading is valid.	Defective sensor, broken/shorted sensor cable or bad connection to XCU-SRH board.	Establish proper connection. If the attempt is unsuccessful, disconnect sensor from XCU-SRH board and measure its resistance to check the integrity of the cable and sensor. Replace sensor if necessary.
						Bad evaluation of signal in XCU-SRH board.	If you have ensured that the sensor is working and is properly connected but the error persists, replace the XCU-SRH board.
5172	--	Customer	Alarm Signal from temperature sensor TC3 at the condenser is outside the permissible range	x	Temperature reading from TC3 is invalid. Heat pump operation is blocked. Error is automatically cleared when the temperature reading is valid.	Defective sensor, broken/shorted sensor cable or bad connection to XCU-SRH board.	Establish proper connection. If the attempt is unsuccessful, disconnect sensor from XCU-SRH board and measure its resistance to check the integrity of the cable and sensor. Replace sensor if necessary.
						Bad evaluation of signal in XCU-SRH board.	If you have ensured that the sensor is working and is properly connected but the error persists, replace the XCU-SRH board.
5173	--	Customer	Alarm Signal from temperature sensor TR6 on the discharge side of the compressor is outside the permissible range	x	Temperature reading from TR6 is invalid, and sensor TR1 is also invalid. In a normal case, the control unit would allow operation with {TR1+15K} as an internal placeholder for TR6. The fall-back routine is no longer possible when both sensors are invalid. (See related error 5114.) Heat pump operation is blocked. Error is cleared when the recovery condition is fulfilled.	Defective sensors, broken/shorted sensor cables or bad connections to XCU-SRH board.	Establish proper connections. If the attempt is unsuccessful, disconnect sensors from XCU-SRH board and measure their resistance to check the integrity of the cables and sensors. Replace sensors if necessary.
						Bad evaluation of signals in XCU-SRH board.	If you have ensured that the sensors are working and are properly connected but the error persists, replace the XCU-SRH board.

SOLAR PLAZA
Solarthermie und Wärmepumpen

BOSCH Compress 5800i AW12 OR-T ·erhältlich bei solarplaza.at

Error Code	Display Code(s)	Display Level	Alarm Text	Buzzer	Alarm Definition	Possible Cause	Action
5174	--	Customer	Info Condensation temperature too low	x	Error code 5183 has been triggered more than 2 times within 3 hours, or has been continuously active for 15 minutes. Heat pump operation is blocked. Error requires manual reset (or that power is turned off and on).	Cold hydraulic circuit. (For instance when commissioning a new installation.)	You may temporarily activate operation with additional heater operation only, to raise the temperature, before resetting the alarm and giving it a new attempt.
						Too low outdoor temperature. (Cooling mode)	No action. The heat pump will be allowed to resume operation once the outdoor temperature has increased.
						Too low refrigerant charge.	Search for leak. Repair leak and refill refrigerant if necessary.
5175	--	Customer	Info Inverter temperature too high		Inverter is overheated. Heat pump operation is blocked. Error is automatically cleared when the inverter has cooled down.	High sun exposure to outdoor unit in standby mode (when the fan is not running).	Consider setting up some sort of sun protection, or wait for inverter to cool down.
						Heat sink for inverter, inside the air box of the outdoor unit, has become blocked by deposits, or poor thermal conductivity between inverter and heat sink.	Check attachment of inverter and heat sink. Clean heat sink.
5177	--	Customer	Alarm Fault in EEPROM of the control device for the refrigerant circuit	x	Damaged EEPROM in XCU-SRH board. Heat pump operation is blocked. Error is cleared when the recovery condition is fulfilled.	Defective XCU-SRH board.	Replace XCU-SRH board.
5178	--	Installer	Info Faulty watchdog in the control unit for the refrigerant circuit		Watchdog error in XCU-SRH board in the ODU. Error is cleared when the watchdog signal is received again.	Defective XCU-SRH board.	Attempt cycling power to the installation. If the error code persists, replace XCU-SRH board.
5181	--	Customer	Info Evaporation temperature excessively high		Compressor envelope stop is triggered when low pressure temperature JR0 > maximum evaporation temperature, for 2 s. (The error is blocked during the compressor start-up phase.) The compressor is stopped. Error is automatically cleared when the JR0 is within the envelope.	The ambient temperature is most likely too high.	No action. The heat pump will be allowed to run when the evaporation temperature drops.

SOLAR PLAZA
Solarsystemen und Wärmepumpen

BOSCH Compress 5800i AW12 OR-T ·erhältlich bei solarplaza.at

Error Code	Display Code(s)	Display Level	Alarm Text	Buzzer	Alarm Definition	Possible Cause	Action
5182	--	Customer	Info Evaporation temperature excessively low		Compressor envelope stop is triggered when low pressure temperature < minimum evaporation temperature, for 2 s. The compressor is stopped. Error is automatically cleared when JR0 is within the envelope.	Too low ambient temperature. (Heating mode)	No action. The heat pump will be allowed to run when the evaporation temperature rises.
						Blocked or low air flow through air coil heat exchanger in the heat pump. (Heating mode)	Ensure sufficient air flow.
						Air can recirculate from air outlet to air inlet, if the heat pump is confined within a small space, which can lead to a premature stop. (Heating mode)	Compare air inlet temperature TL2 to outdoor temperature T1. If TL2 is noticeably lower, 2 or more degrees lower than T1 for instance, it can be a sign of poor heat pump placement.
						VR0 is not regulating.	Ensure proper cable connection for VR0.
5183	--	Customer	Info Condensation temperature excessively low		Compressor envelope stop is triggered when high pressure temperature JR1 < minimum condensation temperature, for 2 s. (The error is blocked during the compressor start-up phase.) The compressor is stopped. Error is automatically cleared when JR1 is within the envelope.	Too low temperature of heating system. (Heating mode)	No action. The heat pump will be allowed to run once the additional heater has raised the heat carrier temperature to a suitable level.
						Too low outdoor temperature. (Cooling mode)	No action. The heat pump will be allowed to resume operation once the outdoor temperature has increased.
						In older software versions, the error is allowed to trigger also during frost protection. Since XCU-SRH software v9.6.0/9.6.1, the error code is disabled during frost protection.	Updating the XCU-SRH (ODU) software to v9.6.0/9.6.1 can help to reduce unnecessary alarms.
5184	--	Installer	Info No pressure build-up during compressor operation		The pressure differential JR1-JR0 is checked during compressor start-up. The error is triggered if the pressure differential is less than 1 bar, after 100 s of operation. Error is automatically cleared if the pressure differential is sufficient in a later start-up.	Electronic expansion valve VR1 has become stuck in open position.	Check that servo motor is properly attached on the valve. Refer to separate section in service manual about testing the expansion valve.
						4-way valve VR4 in refrigerant circuit has become jammed in a middle position, causing an unintentional pressure equalization.	Check electrical connection and signal to solenoid on 4-way valve. Attempt to switch it back and forth in manual operation.
						Low pressure sensor JR0 gives an incorrect reading.	Check actual pressure with pressure gauge.
						High pressure sensor JR1 gives an incorrect reading.	Check actual pressure with pressure gauge.
5185	--	Installer	Info Heater of the condensate catch pan overheated		Temperature TA4 > 55°C. Compressor operation is blocked. Error is automatically cleared when < 52°C.	Output for drip tray heater is continuously on. Possibility of jammed relay in XCU-SRH board.	Put the system in manual operation and set the drip tray heater output to off. Measure the output voltage. If the output is still active, replace the XCU-SRH board.

SOLAR PLAZA
Solarsystemen und Warmepumpen

BOSCH Compress 5800i AW12 OR-T ·erhältlich bei solarplaza.at

Error Code	Display Code(s)	Display Level	Alarm Text	Buzzer	Alarm Definition	Possible Cause	Action
5186	--	Installer	Info Condensation catch pan heater is permanently on		Drip tray heater temperature TA4 > Air inlet temperature TL2 + 5K, for more than 30 minutes. Compressor operation is blocked. Manual reset is not possible. The error is automatically cleared once TA4 < TL2 + 4K.	Improper installation of drip tray heater cable EA0, in that it receives constant voltage.	Ensure that the heating cable is connected to the correct output, terminal 1F1-2N, and not to a continuous voltage source.
5187	--	Customer	Alarm Condensation catch pan heater is permanently on	x	Error code 5186 was active for more than 3 h. Compressor operation is blocked. Error requires manual reset.	Improper installation of drip tray heater cable EA0, in that it receives constant voltage.	Ensure that the heating cable is connected to the correct output, terminal 1F1-2N, and not a continuous voltage source.
						The output 1F1-2N comes from a relay, which in turn is controlled by terminal EA0/O70 on the XCU-SRH board. Something could be wrong along this signal path.	Check the signal path to make sure that the relay is not stuck in active position.
						Signal from XCU-SRH board is continuously active.	Test heating cable activation/deactivation in function test mode, and measure the output EA0/O70. If always on, XCU-SRH is defective and needs to be replaced.
5188	--	Installer	Info Faulty communication to the fan		Triggered immediately when Modbus communication is broken. Manual reset is not possible. Error is automatically cleared when communication is resumed. This error code is removed since XCU-SRH v9.6.0/9.6.1. (See also error code 5170.)	Poor Modbus connection between XCU-SRH and fan.	Ensure proper connection.

SOLAR PLAZA
Solarsystemen und Wärmepumpen

BOSCH Compress 5800i AW12 OR-T ·erhältlich bei solarplaza.at

Error Code	Display Code(s)	Display Level	Alarm Text	Buzzer	Alarm Definition	Possible Cause	Action
5284	A01	Customer	Info The last thermal disinfection failed		Thermal disinfection was not completed within the maximum duration, or if there is no available DHW sensor. The maximum duration can be set via the HMI and has a default value of 180 minutes. Error code is automatically cleared when a thermal disinfection is completed. Since XCU-THH v7.10.0 it can also be cleared manually.	Water is continuously tapped from cylinder. I.e. the set time of day for thermal disinfection is poorly matched to the user profile.	Select a time which does not coincide with large hot water usage. As an alternative one can raise the maximum duration for thermal disinfection.
						The electric heater output is set too low in relation to hot water volume.	If the fuse requires the electric heater to run at limited power, you may need to allow a longer time for thermal disinfection.
						Hot water sensor TW2 (where applicable) is not properly placed on the cylinder or have come loose.	Position sensor in the correct position.
						Incorrect reading from DHW sensors.	Check sensors TW1 and TW2.
						Diverter valve VW1 does not shift from heating to DHW.	Test diverter valve in manual operation. Ensure that signal cabling for the stepper motor is properly attached.
						Electric heater is defective.	Measure outputs for electric heater in manual operation.
						Substantial heat loss from pipes when DHW circulation is used.	Improve insulation.
6059	A51	Customer	Coll. temp. sensor used as solar cyl. 2 sensor		The alarm is produced by the solar module and indicates that the wrong sensor type is used for solar cylinder 2.	The most common cause is that the collector sensor has been connected by mistake.	Connect the correct sensor.
6060	A51	Customer	Coll. temp. sensor used as solar cyl. 3 sensor		The alarm is produced by the solar module and indicates that the wrong sensor type is used for solar cylinder 3.	The most common cause is that the collector sensor has been connected by mistake.	Connect the correct sensor.
6070	A51	Customer	Solar thermal system not yet started		The installer has completed the configuration of the solar module but has not approved of it to start within 15 minutes from the completion of the configuration. There is a special menu alternative under commissioning that starts the solar module, where the installer is asked if the system is filled. Answering yes to the question will start the solar module. The alarm was created because many installers would forget to start the solar module after completing its configuration. The alarm can be given again if the configuration is changed.	The installer has forgotten to start the solar module.	Check the configuration is correct and that the rotary encoders on the solar module is correctly set. Start the solar module from the commissioning meny for the solar module under service menu.

SOLARPLAZA
Solarthermie und Wärmepumpen

BOSCH Compress 5800i AW12 OR-T ·erhältlich bei solarplaza.at

Error Code	Display Code(s)	Display Level	Alarm Text	Buzzer	Alarm Definition	Possible Cause	Action
6230	--	Installer	Info Signal from outdoor sensor T1 is outside the characteristic curve		Temperature reading is outside of the approved range. When T1 is invalid, TL2 (air inlet sensor on ODU) is used as an internal placeholder value for outdoor temperature, to allow continued operation. The error code is automatically cleared when T1 gives a valid temperature reading.	Broken or shorted cable between XCU-THH and sensor T1.	Repair cable or replace sensor.
						Defective sensor.	With the sensor disconnected from the XCU-THH board, check its resistance with a multimeter and compare value with sensor characteristics table values. Replace sensor if needed.
6231	--	Customer	Alarm Signal from outdoor sensor T1 is outside the characteristic curve	x	Error code 6230 has been triggered more than 2 times in the previous 3 h, or has been continuously active for more than 15 min. When T1 is invalid, TL2 (air inlet sensor on ODU) is used as an internal placeholder value for outdoor temperature, to allow continued operation. The error code is automatically cleared when T1 gives a valid temperature reading.	Broken or shorted cable between XCU-THH and sensor T1.	Repair cable or replace sensor.
						Defective sensor.	With the sensor disconnected from the XCU-THH board, check its resistance with a multimeter and compare value with sensor characteristics table values. Replace sensor if needed.
						Defective XCU-THH board.	If the error code persists with a valid sensor, the XCU-THH board may be defective and needs to be replaced.
6232	--	Installer	Info Signal from flow temperature sensor T0 is outside the characteristic curve		Temperature reading is outside of the approved range. Operation is halted. Error code is automatically cleared when T0 gives a valid temperature reading.	Broken or shorted cable between XCU-THH and sensor T0.	Repair cable or replace sensor.
						Defective sensor.	With the sensor disconnected from the XCU-THH board, check its resistance with a multimeter and compare value with sensor characteristics table values. Replace sensor if needed.
6233	--	Customer	Alarm Signal from flow temperature sensor T0 is outside the characteristic curve	x	Error code 6232 has been triggered more than 2 times in the previous 3 h, or has been continuously active for more than 15 min. Operation is halted. Error code is automatically cleared when T0 gives a valid temperature reading.	Broken or shorted cable between XCU-THH and sensor T0.	Repair cable or replace sensor.
						Defective sensor.	With the sensor disconnected from the XCU-THH board, check its resistance with a multimeter and compare value with sensor characteristics table values. Replace sensor if needed.
						Defective XCU-THH board.	If the error code persists with a valid sensor, the XCU-THH board may be defective and needs to be replaced.

SOLAR PLAZA
Solarsystemen und Wärmepumpen

BOSCH Compress 5800i AW12 OR-T ·erhältlich bei solarplaza.at

Error Code	Display Code(s)	Display Level	Alarm Text	Buzzer	Alarm Definition	Possible Cause	Action
6234	--	Installer	Info Signal from return temperature sensor TC0 is outside the characteristic curve		Temperature reading is outside of the approved range. The control unit will use TC3 as an internal placeholder temperature, based on TC3, water volume flow and estimated heat pump output. In earlier XCU-THH v7.10.0, the control unit uses TC3 directly as placeholder value. In this way heat pump operation can continue, albeit at a lower degree of optimization. XCU-THH v<7.10.0 does not have support for a placeholder value which means heat pump operation is blocked in that case. Error code is automatically cleared when TC0 gives a valid temperature reading.	Broken or shorted cable between XCU-THH and sensor TC0.	Repair cable or replace sensor.
						Defective sensor.	With the sensor disconnected from the XCU-THH board, check its resistance with a multimeter and compare value with sensor characteristics table values. Replace sensor if needed.
6235	--	Customer	Alarm Signal from return temperature sensor TC0 is outside the characteristic curve	x	Error code 6234 has been triggered more than 2 times in the previous 3 h, or has been continuously active for more than 15 min. Error code is automatically cleared when TC0 gives a valid temperature reading.	Broken or shorted cable between XCU-THH and sensor TC0.	Repair cable or replace sensor.
						Defective sensor.	With the sensor disconnected from the XCU-THH board, check its resistance with a multimeter and compare value with sensor characteristics table values. Replace sensor if needed.
						Defective XCU-THH board.	If the error code persists with a valid sensor, the XCU-THH board may be defective and needs to be replaced.
6236	--	Installer	Info Signal from internal flow temp. sensor TC1 is outside the characteristic curve		Temperature reading is outside of the approved range. An internal placeholder value for TC1 will be calculated and used by the control unit, based on TC3, water volume flow and electric heater output. This allows continued electric heater operation, as long as the calculated placeholder value is lower than 50°C. For XCU-THH < v7.10.0, the use of an internal placeholder value is not supported and electric heater is blocked. Error code is automatically cleared when TC1 gives a valid temperature reading.	Broken or shorted cable between XCU-THH and sensor TC1.	Repair cable or replace sensor.
						Defective sensor.	With the sensor disconnected from the XCU-THH board, check its resistance with a multimeter and compare value with sensor characteristics table values. Replace sensor if needed.

SOLAR PLAZA
Solarsysteme und Wärmepumpen

BOSCH Compress 5800i AW12 OR-T ·erhältlich bei solarplaza.at

Error Code	Display Code(s)	Display Level	Alarm Text	Buzzer	Alarm Definition	Possible Cause	Action
6237	--	Customer	Alarm Signal from internal flow temp. sensor TC1 is outside characteristic curve	x	Error code 6236 has been triggered more than 2 times in the previous 3 h, or has been continuously active for more than 15 min. Error code is automatically cleared when TC1 gives a valid temperature reading. (electric heater blocking follows the same logic described for error code 6236.)	Broken or shorted cable between XCU-THH and sensor TC1.	Repair cable or replace sensor.
						Defective sensor.	With the sensor disconnected from the XCU-THH board, check its resistance with a multimeter and compare value with sensor characteristics table values. Replace sensor if needed.
						Defective XCU-THH board.	If the error code persists with a valid sensor, the XCU-THH board may be defective and needs to be replaced.
6238	--	Installer	Info Signal from domestic hot water temperature sensor TW1 is outside the characteristic curve		Temperature reading is outside of the approved range. For XCU-THH v7.10.0+: When TW1 is invalid, TW2 will be used as an internal placeholder value for TW1, to allow continued operation. The error code is automatically cleared when TW1 gives a valid temperature reading. For older versions of XCU-THH, or if TW2 is not available: DHW operation is blocked. The error code is automatically cleared when TW1 gives a valid temperature reading.	Broken or shorted cable between XCU-THH and sensor TW1.	Repair cable or replace sensor.
						Defective sensor.	With the sensor disconnected from the XCU-THH board, check its resistance with a multimeter and compare value with sensor characteristics table values. Replace sensor if needed.
6239	--	Customer	Alarm Signal from domestic hot water temperature sensor TW1 is outside the characteristic curve		Error code 6238 has been triggered more than 2 times within the previous 3 h, or has been continuously active for more than 15 min. For XCU-THH v7.10.0+: When TW1 is invalid, TW2 will be used as an internal placeholder value for TW1, to allow continued operation. DHW comfort is likely to suffer a bit due to the higher position of TW2 on the DHW cylinder. The error code is automatically cleared when TW1 gives a valid temperature reading. For older versions of XCU-THH, or if TW2 is not available: DHW operation is blocked. The error code is automatically cleared when TW1 gives a valid temperature reading.	Broken or shorted cable between XCU-THH and sensor TW1.	Repair cable or replace sensor.
						Defective sensor.	With the sensor disconnected from the XCU-THH board, check its resistance with a multimeter and compare value with sensor characteristics table values. Replace sensor if needed.
						Defective XCU-THH board.	If the error code persists with a valid sensor, the XCU-THH board may be defective and needs to be replaced.

SOLAR PLAZA
Solaranlagen und Wärmepumpen

BOSCH Compress 5800i AW12 OR-T ·erhältlich bei solarplaza.at

Error Code	Display Code(s)	Display Level	Alarm Text	Buzzer	Alarm Definition	Possible Cause	Action
6240	--	Installer	Info Signal from domestic hot water temperature sensor TW2 is outside the characteristic curve		Temperature reading is outside of the approved range. When TW2 is invalid, TW1 will be used as an internal placeholder value for TW2, to allow continued operation. The error code is automatically cleared when TW2 gives a valid temperature reading.	Broken or shorted cable between XCU-THH and sensor TW1.	Repair cable or replace sensor.
						Defective sensor.	With the sensor disconnected from the XCU-THH board, check its resistance with a multimeter and compare value with sensor characteristics table values. Replace sensor if needed.
6241	--	Customer	Alarm Signal from domestic hot water temperature sensor TW2 is outside the characteristic curve		Error code 6240 has been triggered more than 2 times within the previous 3 h, or has been continuously active for more than 15 min. When TW2 is invalid, TW1 will be used as an internal placeholder value for TW2, to allow continued operation. The error code is automatically cleared when TW2 gives a valid temperature reading.	Broken or shorted cable between XCU-THH and sensor TW2.	Repair cable or replace sensor.
						Defective sensor.	With the sensor disconnected from the XCU-THH board, check its resistance with a multimeter and compare value with sensor characteristics table values. Replace sensor if needed.
						Defective XCU-THH board.	If the error code persists with a valid sensor, the XCU-THH board may be defective and needs to be replaced.

SOLAR PLAZA
Solarsystemen und Wärmepumpen

BOSCH Compress 5800i AW12 OR-T ·erhältlich bei solarplaza.at

Error Code	Display Code(s)	Display Level	Alarm Text	Buzzer	Alarm Definition	Possible Cause	Action
6242	--	Customer	Alarm safety temperature switch FE at the electric heater is open	(x)	Alarm is given when the overheating protector of the electric heater is tripped, which happens at 88 degrees. Electric heater is blocked with active alarm. Error requires manual reset.	Tripped overheating protector.	Reset the overheating protector. Note that the button must be pushed hard. A "click" is heard when reset.
						Low system pressure. Air in the heating system.	De-air heating system according to instruction in the installer guide. Refill heating system.
						Clogged filterball on heat carrier return pipe.	Clean filter ball.
						Bad circulation in the heating carrier/heating system.	Check adjustment valves/thermostats for heating system.
						Defective overheating protector.	Verify threshold temperature 96°C for overheating protector. Replace overheating protector if to trips too soon.
						Circulation pump PC0 does not run.	Check alarm log to see if PC0 has produced any alarm in conjunction with this error, and follow the trouble-shooting advice for that code. Since PC0 cannot produce an alarm if its supply voltage is missing, the supply voltage needs to be checked as well.
						Defective circulation pump.	If PC0 has its supply voltage connected and has not produced any alarms, but still does not run - replace the circulation pump.
						XCU-SEH board is defective. One of the output relays for the electric heater may have become stuck in closed position.	Toggle each electric heater output, one at a time, off and on from the HMI in manual mode. Measure the corresponding control signal on the XCU-SEH board. If an output is continuously active regardless of setting, replace the XCU-SEH board.
6243	--	Customer	Warning High temperature differential between heat pump flow and return temperature sensor (TC3-TC0)		The temperature delta {TC3-TC0} > 13K in heating mode, or {TC3-TC0} < -10K in cooling mode, indicating poor circulation. A prerequisite for triggering the error is that PC0 has been running at more than 95% of its relative max speed for 1 h. The system is still operational but under less than ideal conditions. Error requires manual reset.	Deposits of dirt in hydraulic system.	Check and clean the filterball valve on the return pipe.
						Closed adjustment valve(s) or blocked non-return valve.	Check adjustment valves and thermostats for the circuits.
						Air in hydraulic system.	Perform de-airing if necessary.

SOLAR PLAZA
Solaranlagen und Wärmepumpen

BOSCH Compress 5800i AW12 OR-T ·erhältlich bei solarplaza.at

Error Code	Display Code(s)	Display Level	Alarm Text	Buzzer	Alarm Definition	Possible Cause	Action
6244	--	Installer	Info Invalid signal from water pressure sensor JC0		The pressure reading from sensor JC0, for the hydraulic system, is outside of the approved range. Electric heater operation is blocked. Error code is cleared when pressure reading from JC0 has been valid for 15 min, or when error is manually reset while JC0 is valid.	Bad signal connection between XCU-THH board and pressure sensor JR0 for the heating system. (Broken or shorted circuit.)	Check plugs and cable between board and sensor.
6246	--	Customer	Alarm Invalid signal from water pressure sensor JC0	(x)	Error code 6244 was triggered 3 times in the previous 3 hours, or was continuously active for more than 15 min. Electric heater operation is blocked. (Heat pump operation is not blocked by this error, because the ODU can protect itself by a high pressure alarm.) Error code is cleared when JC0 has been valid for 15 min, or when error is manually reset while JC0 is valid.	Bad signal connection between XCU-THH board and pressure sensor JR0 for the heating system. (Broken or shorted circuit.)	Check plugs and cable between board and sensor.
						Pressure sensor JR0 provides a bad signal.	Replace pressure sensor JR0.
						Bad evaluation or signal from pressure sensor JR0, in the XCU-THH board.	If the error persists with a verfied or new pressure sensor, replace the XCU-THH board.
6247	--	Installer	Info Frost danger in the indoor unit or the domestic hot water tank		Two possible scenarios: 1) DHW temperature TW1 or TW2 has dropped below 5°C. Hydraulic frost protection is started by triggering a DHW request with 15°C as TW1 setpoint temperature. 2) Return temperature TC0 or flow temperature after electric heater TC1 is lower than 4°C. Hydraulic circuit frost protection is started by triggering of heating request with 25°C as setpoint temperature. Error code is automatically cleared when the applicable frost protection setpoint is reached.	Defective sensor.	Ensure that temperature readings make sense. Check the different sensors and compare their readings to measurement with external thermometer.

SOLAR PLAZA
Solaranlagen und Wärmepumpen

BOSCH Compress 5800i AW12 OR-T ·erhältlich bei solarplaza.at

Error Code	Display Code(s)	Display Level	Alarm Text	Buzzer	Alarm Definition	Possible Cause	Action
6248	--	Customer	Alarm Underfloor temperature limiter has tripped	x	The external input configured for underfloor temperature limiter (STB) is active. (Whether a closed or open circuit is interpreted as active, is defined in the settings for the external input.) If the limiter is connected to the primary circuit, heat pump and electric heater operation is blocked. If limiter is connected to a mixed circuit, heating operation for that circuit only is blocked (circulation pump stops, mixing valve closes). Error code is automatically cleared when the external input reads inactive signal.	Switching point for external overtemperature switch, on underfloor heating circuit, is set too low.	Check switching point and adjust if needed. Make sure not to exceed the maximum temperature allowed for the floor type.
						Incorrect configuration or external input used for the overtemperature switch. Signal logic may have been inverted.	Check and adjust setting in HMI if necessary.
						Defective temperature limiter or poor connection.	Check signal path between external input and temperature limiter.
						Flow temperature T0 for the heating system, is not installed at the correct measuring point, which may lead to overtemperature.	Position flow sensor T0 in accordance with the installation manual.
						Bad circulation of heat carrier flow.	Check heat carrier delta. If additional error codes, associated with circulation pump PC0, are found in the log, follow troubleshooting advice for those error codes.
6249	--	Installer	Info Bus communication between indoor and outdoor unit disrupted		Poor CAN bus communication between IDU and ODU. Heat pump operation is blocked when the error is active. Error code is automatically cleared when communication is resumed.	Intermittent CAN bus connection between the boards, XCU-THH (IDU) and XCU-SRH (ODU).	Check integrity of cable. Try loosening and reattaching connectors.
						Possible interference on CAN bus, due to insufficient clearance between CAN bus cable and power cables.	A clearance of 10 cm between CAN bus cable and power cables is normally advised. Refer to installation manual for more information.
						EVU (ESC "Energy Supplier Control") blocking is active, switching off the ODU. This in turn disrupts CAN communication. Since XCU-THH software v9.6.1, EVU blocking automatically resets this error.	Update software of IDU (XCU-THH) to v9.6.1 to prevent errors caused by EVU blocking.
6250	--	Customer	Alarm Bus communication between indoor and outdoor unit interrupted	x	Prolonged disruption of CAN bus communication between IDU and ODU. Error code 6249 was triggered 3 times within the past 3 hours, or was continuously active for more than 15 min. Heat pump operation is blocked when the error is active. Error code is automatically cleared when communication is resumed. Since XCU-THH v9.6.1,	Intermittent or broken CAN bus connection between the boards, XCU-THH (IDU) and XCU-SRH (ODU).	Check integrity of cable. Try loosening and reattaching connectors.
						Possible interference on CAN bus, due to insufficient clearance between CAN bus cable and power cables.	A clearance of 10 cm between CAN bus cable and power cables is normally advised. Refer to installation manual for more information.
						EVU (ESC "Energy Supplier Control") blocking is active, switching off the ODU. This in turn disrupts CAN communication. Since XCU-THH software v9.6.1, EVU blocking automatically resets this error.	Update software of IDU (XCU-THH) to v9.6.1 to prevent errors caused by EVU blocking.

SOLAR PLAZA
Solaranlagen und Wärmepumpen

BOSCH Compress 5800i AW12 OR-T ·erhältlich bei solarplaza.at

Error Code	Display Code(s)	Display Level	Alarm Text	Buzzer	Alarm Definition	Possible Cause	Action
6251	--	Installer	Info Temperature gradient at temperature sensor TC1 too high		The electric heater outlet temperature TC1 is continuously monitored when the electric heater is active. The error is triggered if a rapid temperature increase of TC1 is detected, indicating a problem. The electric heater is immediately blocked as a protective measure. Error code is automatically cleared when the delta TC1-TC3 < 3K.	Air in the electric auxiliary heater, or in the pipes between indoor- and outdoor units.	Perform de-airing.
6252	--	Customer	Alarm Temperature gradient at temperature sensor TC1 too high	(x)	Error code 6251 has been triggered more than two times within an hour. The electric heater is immediately blocked as a protective measure. Once the delta TC1-TC3 < 3K, the error can be cleared through manual reset (or by cycling power).	Air in the electric auxiliary heater, or in the pipes between indoor- and outdoor units.	Perform de-airing.
6253	--	Customer	Alarm Temperature in Electric booster heater EE too high	(x)	The electric heater outlet temperature TC1 >= 86°C for 2 s. The electric heater is immediately blocked. Manual reset is not possible. Error code is automatically cleared when TC1 < 70°C.	Air in the electric auxiliary heater, or in the pipes between indoor- and outdoor units.	Perform de-airing.
						Contactor/relay for the electric heater has become stuck in active position.	Operate the electric heater manually from the HMI. Switch each step on/off, one by one, and measure the output with each switch. If a contactor is found active regardless of activation signal, replace contactor. If relays on XCU-SEH board are used instead of contactors, replace XCU-SEH.
6254	--	Installer	Info Dew point monitor has responded		The dew point guard is attached to input MD1 on the XCU-THH board. Error code is triggered when resistance of the dew point guard < 18 MOhm. Since XCU-THH v7.10.0, the info message is triggered only after the circuit is shorted continuously for 20 min. Regardless of software version, cooling is immediately disabled when the circuit for the dew point guard is closed. The info message is automatically cleared when resistance of the dew point guard > 20 MOhm, for more than 60 s.	The minimum flow temperature for the cooling circuit is set too low.	Check cooling configuration in HMI.
						Shorted circuit for dew point guard, either due to condensate on sensor (intended function) or because of damaged cable/guard.	Check cable integrity. Replace dew point sensor if necessary.

SOLAR PLAZA
Solarsysteme und Wärmepumpen
BOSCH Compress 5800i AW12 OR-T ·erhältlich bei solarplaza.at

Error Code	Display Code(s)	Display Level	Alarm Text	Buzzer	Alarm Definition	Possible Cause	Action
6255	--	Customer	Alarm Dew point monitor has tripped several times		Error code 6254 was triggered 3 times within 3 h (1 h for XCU-THH version <= 7.10.0), or was continuously active for more than 15 minutes. Cooling is disabled when the error is active. Error is automatically cleared when the resistance of the dew point guard > 20 MOhm, for more than 30 minutes.	The minimum flow temperature for the cooling circuit is set too low.	Check cooling configuration in HMI.
						Shorted circuit for dew point guard, either due to condensate on sensor (intended function) or because of damaged cable/guard.	Check cable integrity. Replace dew point sensor if necessary.
6256	--	Customer	Alarm Flow temperature too high	x	There are two temperature limits defined for this alarm: 1) Flow temperature T0 > {max flow temp + 5K} for 40 min. 2) T0 > {max flow temp + 15K} for 5 min. T0 is the flow sensor for the primary circuit and max flow temp is the maximum flow temperature defined for the circuit. Temperature triggers defined above can however never go below the following lower temperature limits: 45°C for 1), and 55°C for 2). If the maximum temperature defined for the circuit is 35°C for instance, the first limit 1) is 45°C (not 35°C + 5K). When VBH "Ventilation-Based Heating" is used, max flow temp is defined as the actual heating setpoint. Heating (compressor + additional heater + circulation pump PC1) is blocked. Error is automatically cleared when T0 < {max flow temp - 2K}. As long as the recovery condition is not yet fulfilled, PC0 is unblocked periodically (off for 30 min, on for 5 min, repeatedly), to allow faster cooldown of the flow temperature.	Flow sensor for electric heater outet, TC1, is not properly mounted in the sensor well on the electric heater.	Check sensor position and adjust if needed.
						Incorrect sensor reading from TC3/TC1/T0.	Compare temperature reading in display to separate measurement with external sensor/thermometer. Replace sensor if necessary.
						The system is in heating mode but the diverter valve was not able to fully switch from DHW position, causing a partial flow of hot water from the cylinder to raise the temperature of T0.	Test diverter valve VW1 in manual mode from the HMI. Check that the stepper motor is properly mounted on the valve and that signal cables are properly connected. If found ok, replace the motor/cable for the diverter valve.
						Contactor for the electric heater has become stuck in active position.	Operate the electric heater manually from the HMI. Switch each step on/off, one by one, and measure the output with each switch. If a contactor is found active regardless of activation signal, replace contactor.
6257	--	Customer	Alarm no flow through circulation pump PC0	x	Volume flow measurement from PC0 is below 2 l/min for 10 s. Additional heater and compressor are immediately blocked. Error is cleared through manual reset (or by cycling power).	Air in system.	Check, de-air and fill heating system.
						Dirt filter in the connecting pipes between IDU and ODU is blocked by deposits.	Clean the filter.
						Shut-off valve(s) in the connecting pipes between IDU and ODU are closed.	Open shut-off valves.
						Non-return valve in the connecting pipes between IDU and ODU is blocked.	Check non-return valve. It is a possibility that the opening resistance of the non-return valve is too high. Replace if necessary.

SOLARPLAZA
Solartechnologie für Wärmepumpen

BOSCH Compress 5800i AW12 OR-T ·erhältlich bei solarplaza.at

Error Code	Display Code(s)	Display Level	Alarm Text	Buzzer	Alarm Definition	Possible Cause	Action
6258	--	Installer	Info Poor communication with circulation pump PC0		LIN bus communication with circulation pump is broken. Additional heater and compressor are blocked. If communication with PC0 is broken for more than 1 s, the pump is kept running at 50% of its max speed (fallback setting). Error is automatically cleared when communication is re-established.	Broken LIN bus cable connection between XCU-THH board and circulation pump PC0.	Check for loose connection and damaged cable.
6259	--	Customer	Alarm No communication with circulation pump PC0	x	Error code 6258 was triggered more than 2 times within 1 hour, or was continuously active for more than 15 minutes Additional heater and compressor are blocked. PC0 is kept running at 50% of its max speed (fallback setting). Error is automatically cleared when communication is re-established.	Broken LIN bus cable connection between XCU-THH board and circulation pump PC0.	Check for loose connection and damaged cable.
6260	--	Installer	Info Circulation pump PC0 undervoltage		Error is triggered by PC0 when its supply voltage < 190 VAC. Circulation pump can still run. Error is automatically cleared when supply voltage is normal.	Temporary voltage fluctuation in power grid. Low supply voltage.	Check voltage.
6261	--	Installer	Info Circulation pump PC0 air warning		PC0 has detected air in the system. Error is automatically cleared when proper operating conditions for the pump are restored.	Air in the hydraulic system.	Fill and de-air system.
6262	--	Customer	Alarm circulation pump PC0 locked	x	Error is triggered by PC0 when it is locked (impeller unable to rotate). All operation is halted. Error is automatically cleared when PC0 is able to run again.	Circulation pump is contaminated by dirt.	Replace circulation pump. Check status of particle filter. Ensure that the water quality requirements described in the installation manual are fulfilled.

SOLAR PLAZA
Solaranlagen und Wärmepumpen

BOSCH Compress 5800i AW12 OR-T ·erhältlich bei solarplaza.at

Error Code	Display Code(s)	Display Level	Alarm Text	Buzzer	Alarm Definition	Possible Cause	Action
6263	--	Customer	Alarm Circulation pump PC0 low supply voltage	x	Error is triggered by PC0 when its supply voltage < 150 VAC. Main circulation pump cannot run due to low voltage. Thereby all operation is halted. Error is automatically cleared when supply voltage > 160 VAC.	Low supply voltage.	Check voltage. If voltage is generally low, seek support from electricity supplier.
6264	--	Customer	Alarm Circulation pump PC0 electrical fault	x	Error is triggered by PC0 when it detects an internal electrical fault. All operation is halted. Error is automatically cleared when PC0 is no longer detecting the issue.	Defective circulation pump.	Cycle power to installation. If alarm persists, replace circulation pump PC0.
6265	--	Customer	Alarm Circulation pump PC0 dry run	x	Error is triggered by PC0 when it detects air in the system. All operation is halted. Error is automatically cleared when proper operating conditions are restored.	Large amounts of air in the hydraulic system, or system has not yet been filled.	Fill and de-air system.
6266	--	Installer	Info Poor communication with pump PC1 of the first heating circuit		LIN bus communication with circulation pump is broken. Additional heater and compressor are blocked. Error is automatically cleared when communication is re-established.	Broken LIN bus cable connection between XCU-THH board and circulation pump PC1.	Check for loose connection and damaged cable.
6267	--	Customer	Alarm No communication with pump PC1 of the first heating circuit	x	Error code 6266 was triggered more than 2 times within 1 hour, or was continuously active for more than 15 minutes. Additional heater and compressor are blocked. When PC1 communication has been lost for 2 h, the pump speed is set to 50% of max speed as a fallback setting. Error is automatically cleared when communication is re-established.	Broken LIN bus cable connection between XCU-THH board and circulation pump PC1.	Check for loose connection and damaged cable.

SOLAR PLAZA
Solartechnologie und Wärmepumpen

BOSCH Compress 5800i AW12 OR-T ·erhältlich bei solarplaza.at

Error Code	Display Code(s)	Display Level	Alarm Text	Buzzer	Alarm Definition	Possible Cause	Action
6268	--	Installer	Info Circulation pump PC1 undervoltage		Error is triggered by PC1 when its supply voltage < 190 VAC. Circulation pump can still run. Error is automatically cleared when supply voltage is normal.	Temporary voltage fluctuation in power grid. Low supply voltage.	Check voltage.
6269	--	Installer	Info Circulation pump PC1 air warning		PC1 has detected air in the system. Error is automatically cleared when proper operating conditions for the pump are restored.	Air in the hydraulic system.	Fill and de-air system.
6270	--	Customer	Alarm PC1 circulation pump is blocked	x	Error is triggered by PC1 when it is locked (impeller unable to rotate). Heating/cooling need for primary circuit is ignored when error is active. Error is automatically cleared when PC1 is able to run again.	Circulation pump is contaminated by dirt.	Replace circulation pump. Check status of particle filter. Ensure that the water quality requirements described in the installation manual are fulfilled.
6271	--	Customer	Alarm PC1 Low supply voltage	x	Error is triggered by PC1 when its supply voltage < 150 VAC. Heating/cooling need for primary circuit is ignored when error is active. Error is automatically cleared when supply voltage > 160 VAC.	Low supply voltage.	Check voltage. If voltage is generally low, seek support from electricity supplier.
6272	--	Customer	Alarm PC1 Electrical fault	x	Error is triggered by PC1 when it detects an internal electrical fault. Heating/cooling need for primary circuit is ignored when error is active. Error is automatically cleared when PC1 is no longer detecting the issue.	Defective circulation pump.	Cycle power to installation. If alarm persists, replace circulation pump PC1.
6273	--	Customer	Alarm PC1 Dry run	x	Error is triggered by PC1 when it detects air in the system. Heating/cooling need for primary circuit is ignored when error is active. Error is cleared through manual reset (or by cycling power), when PC1 no longer reports the error.	Large amounts of air in the hydraulic system, or the system has not yet been filled.	Fill and de-air system.

SOLAR PLAZA
Solarthermie und Wärmepumpen

BOSCH Compress 5800i AW12 OR-T ·erhältlich bei solarplaza.at

Error Code	Display Code(s)	Display Level	Alarm Text	Buzzer	Alarm Definition	Possible Cause	Action
6274	--	Installer	Info Communication fault with circulation pump PC2 in the second circuit		Given that a second mixed circuit has a LIN bus-controlled PC2 circulation pump, the error is raised if LIN communication is broken. The setpoint from the second circuit is ignored. When communication with the LIN pump been broken for more than 100 s, the pump runs at 50% of max speed as a fallback option. Error is automatically cleared when communication is re-established.	Broken LIN bus cable connection between XCU-THH board in buffer tower IDU and circulation pump PC2.	Check for loose connection and damaged cable.
6275	--	Customer	Alarm No communication with circulation pump PC2 in the second circuit		Error code 6258 was triggered more than 2 times within 3 hour, or was continuously active for more than 15 minutes Error is automatically cleared when communication is re-established.	Broken LIN bus cable connection between XCU-THH board and circulation pump PC1.	Check for loose connection and damaged cable.
6276	--	Installer	Info Supply voltage at circulation pump PC2 too low		Given that a second circuit has a LIN bus-controlled PC2 circulation pump, the error is triggered if PC2 detects undervoltage. PC2 continues to run but its performance may be affected. Error is automatically cleared when PC2 no longer reports the internal error.	Low supply voltage.	Check voltage. If voltage is generally low, seek support from electricity supplier.
6277	--	Installer	Info Air in the circulation pump PC2		Given that a second circuit has a LIN bus-controlled PC2 circulation pump, the error is triggered if PC2 detects air in the system. The info message is displayed if the event takes place after the initial two minutes after powering up the system. (Also see error code 6281.) PC2 continues to run but its performance may be affected. Error is automatically cleared when PC2 no longer reports the internal error.	Large amounts of air in the hydraulic system, or the system has not yet been filled.	Fill and de-air system.

SOLAR PLAZA
Solarsysteme und Wärmepumpen

BOSCH Compress 5800i AW12 OR-T ·erhältlich bei solarplaza.at

Error Code	Display Code(s)	Display Level	Alarm Text	Buzzer	Alarm Definition	Possible Cause	Action
6278	--	Customer	Alarm Circulation pump PC2 in second circuit is blocked		Given that a second circuit has a LIN bus-controlled PC2 circulation pump, the error is triggered if PC2 reports that it is blocked. Heating/cooling need for second circuit is ignored when error is active. Error is automatically cleared when PC2 no longer reports the internal error.	Circulation pump is contaminated by dirt.	Replace circulation pump. Check status of particle filter. Ensure that the water quality requirements described in the installation manual are fulfilled.
6279	--	Customer	Alarm Supply voltage at heating pump PC2 in second circuit is too low		Given that a second circuit has a LIN bus-controlled PC2 circulation pump, the error is triggered if PC2 reports low supply voltage, < 150 VAC. Heating/cooling need for second circuit is ignored when error is active. Error is automatically cleared when PC2 no longer reports the internal error, at supply voltage > 160 VAC.	Low supply voltage.	Check voltage. If voltage is generally low, seek support from electricity supplier.
6280	--	Customer	Alarm Fault in control device of circuit pump PC2		Given that a second circuit has a LIN bus-controlled PC2 circulation pump, the error is triggered if PC2 reports an internal electrical fault. Heating/cooling need for second circuit is ignored when error is active. Error is automatically reset when PC2 no longer reports the internal error.	Defective circulation pump.	Cycle power to installation. If alarm persists, replace circulation pump PC1.
6287	--	Customer	Alarm Software versions of indoor and outdoor units are incompatible	x	The software versions installed on the XCU-THH (IDU) and XCU-SRH (ODU) boards are incompatible. Operation is blocked. Error is automatically cleared when XCU-SRH and XCU-THH are compatible.	Wrong version number in one of the control boards.	Update software using the Ixxat field update tool.

SOLAR PLAZA
Solarsysteme und Wärmepumpen

BOSCH Compress 5800i AW12 OR-T ·erhältlich bei solarplaza.at

Error Code	Display Code(s)	Display Level	Alarm Text	Buzzer	Alarm Definition	Possible Cause	Action
6288	--	Customer	Alarm safety temperature switch FE at the electric heater is not connected	(x)	The circuit for the safety temperature switch FE, located at the electric heater, is open/broken. Electric heater operation is blocked when the error is active. The error requires manual reset.	Bad connection between safety temperature switch and XCU-THH board.	Check connection.
6289	--	Customer	Alarm EEPROM Error of the appliance control board of the hydraulic unit	x	Defective EEPROM ("electrically erasable programmable read-only memory") in XCU-THH board, located in the IDU. Operation is halted. Error is automatically cleared when the recovery condition is fulfilled.	Defective XCU-THH board.	Attempt to reload SW. If error persists, replace XCU-THH board.
6290	--	Installer	Info Watchdog error of the appliance control board of the hydraulic unit		The watchdog circuit of the XCU-THH board expects a periodic signal from the software, ensuring that it is alive and well. If the watchdog detects a disruption of the periodic signal, a temporary slowdown or interruption of the user interface may be experienced, as actions are taken to recover from a malfunction. Error is automatically cleared when the watchdog is happy.	Temporary high workload for controller.	The problem should go away by itself within 5 minutes. If a newer software is available, you are encouraged to update it.
6291	--	Installer	Info Unspecified outdoor unit fault		The ODU sends an unrecognized, non-blocking error on installer level, which causes the IDU to display this placeholder error code. Non-blocking means that the system is still operational but possibly at reduced performance. Manual reset is not possible. Error is cleared automatically when the recovery condition of the original error is fulfilled.	If the ODU has a more recent software than the IDU, it is possible that the ODU may have introduced new alarms which are not recognized by the IDU.	Upgrade the software of the IDU to align it with the ODU software.
6292	--	Installer	Alarm Unspecified outdoor unit fault		The ODU sends an unrecognized, blocking error on installer level, which causes the IDU to display this placeholder error code. Manual reset is not possible. Error is cleared automatically when the recovery condition of the original error is fulfilled.	If the ODU has a more recent software than the IDU, it is possible that the ODU may have introduced new alarms which are not recognized by the IDU.	Upgrade the software of the IDU to align it with the ODU software.

SOLAR PLAZA
Solarsystemen und Wärmepumpen

BOSCH Compress 5800i AW12 OR-T ·erhältlich bei solarplaza.at

Error Code	Display Code(s)	Display Level	Alarm Text	Buzzer	Alarm Definition	Possible Cause	Action
6293	--	Customer	Alarm Unspecified outdoor unit fault	x	The ODU sends an unrecognized, blocking alarm on customer level, which causes the IDU to display this placeholder error code. Error is cleared through manual reset, or by cycling power.	If the ODU has a more recent software than the IDU, it is possible that the ODU may have introduced new alarms which are not recognized by the IDU.	Upgrade the software of the IDU to align it with the ODU software.
6294	--	Installer	Info Signal from supply temperature sensor TC2 in heating circuit 2 is outside the characteristic curve		Given that that there is second heating circuit controlled from the XCU-THH board in the buffer tower IDU, the error is triggered if the reading from flow temperature sensor TC2 is outside of the approved range. While the sensor reading is unusable, the mixing valve opens to 10%, as a fallback option. Error is automatically cleared when reading has been valid again for 15 min.	Broken or shorted cable between XCU-THH and sensor TC2.	Repair cable or replace sensor.
						Defective sensor.	With the sensor disconnected from the XCU-THH board, check its resistance with a multimeter and compare value with sensor characteristics table values. Replace sensor if needed.
6295	--	Customer	Alarm Signal from supply temperature sensor TC2 in heating circuit 2 is outside the characteristic curve		Error code 6294 was triggered more than 2 times within the last 3 h, or was continuously active for more than 15 min. Error is automatically cleared when the reading has been valid for 15 min.	Broken or shorted cable between XCU-THH and sensor T0.	Repair cable or replace sensor.
						Defective sensor.	With the sensor disconnected from the XCU-THH board, check its resistance with a multimeter and compare value with sensor characteristics table values. Replace sensor if needed.
						Defective XCU-THH board.	If the error code persists with a valid sensor, the XCU-THH board may be defective and needs to be replaced.
6297	--	Customer	Alarm Servomotor on the 3-way mixing valve in heating circuit 2 does not reach the specified target value		Given that there is a second circuit controlled from the XCU-THH board in the buffer tower IDU, the error is triggered if the LIN bus-controlled mixing valve reports that it is blocked. Regulation of mixing valve is stopped. Circulation pump PC2 is stopped. Error is automatically cleared when the mixing valve has not reported the error for at least 1 min.	Possible internal miscalibration of mixing valve.	Detach connector of mixer and reattach it. This will recalibrate the valve, which often solves the problem.
						Defective mixing valve.	Replace the mixing valve if recalibration was unsuccessful.

SOLAR PLAZA
Solaranlagen und Wärmepumpen

BOSCH Compress 5800i AW12 OR-T ·erhältlich bei solarplaza.at

Error Code	Display Code(s)	Display Level	Alarm Text	Buzzer	Alarm Definition	Possible Cause	Action
6298	--	Customer	Alarm LIN bus voltage at the actuator of the 3-way mixing valve in heating circuit 2 is below the setpoint		Given that there is a second circuit controlled from the XCU-THH board in the buffer tower IDU, the error is triggered if the LIN bus-controlled mixing valve of the second heating circuit reports that LIN bus voltage is too low. Regulation of mixing valve is stopped. Circulation pump PC2 is stopped. Error is automatically cleared when mixing valve has not reported the error for at least 1 min.	Bad connection on LIN bus.	Check LIN connectors.
						If multiple alarms for low LIN bus voltage are active for several actuators, it can be an indication that the XCU-THH board is defective in that it fails to provide the correct voltage.	Replace XCU-THH.
6299	--	Customer	Alarm Error in the LIN bus communication between the control unit and the servomotor on the 3-way mixing valve for heating circuit 2		Given that there is a second circuit controlled from the XCU-THH board in the buffer tower IDU, the error is triggered if the communication with the LIN bus-controlled mixing valve is not working. Regulation of mixing valve is stopped. Circulation pump PC2 is stopped. Error is automatically cleared when communication has been established for at least 1 min.	Bad connection between XCU-THH board and mixing valve.	Ensure proper LIN bus connection. Check the wiring connectors.
						If there are active communication alarms for all LIN-connected actuators, and connections are intact, the XCU-THH board may be defective.	Replace XCU-THH.
						If the mixing valve is the only actuator triggering communication alarms, and connections are good, the mixing valve may be defective.	Replace mixing valve.

SOLAR PLAZA
Solarsystemen und Wärmepumpen

BOSCH Compress 5800i AW12 OR-T ·erhältlich bei solarplaza.at

6.2 Function test of heat pump

When it comes to the internal components in the heat pump/outdoor unit, they are not manually operated one by one like other components in the system. Instead, the technician activates a test procedure, which in turn activates the internal components in a predefined sequence.

```
Service/
   Diagnosis/
      Function tests/
         Activate function tests {No, Yes}          (1)
         Heat pump/
            Refrigerant circ test {Off, On}         (2)
```

Select **(1)** = Yes.

Operation is stopped. The 4-way valve switches to heating position. The compressor is stopped.

Select **(2)** = On. This activates the test sequence.

The test sequence is defined as follows:

1. Fan test

1. Fan runs at 100% for 20 s.
2. Fan is stopped.

2. Drip tray heater test

1. Drip tray heater is activated for 20 s.
2. Drip tray heater is deactivated, followed by a 120 s delay.

3. EEV (electronic expansion valve) test

1. Fan runs at 100% for 20 s.
2. Fan is stopped.
3. EEV VR0 opens fully, followed by a 10 s delay.
4. EEV VR0 closes fully, followed by a 10 s delay.
   Step 3-4 runs three times.
5. EEV VR0 enters its idle position.
6. EEV VR1 opens fully, followed by a 10 s delay.
7. EEV VR1 closes fully, followed by a 10 s delay.
   Step 6-7 runs three times.
8. VR1 enters its idle position.

4. 4-way valve test

1. Fan runs at 100% for 20 s.
2. Fan is stopped.
3. 4-way valve is switched, followed by a 5 s delay.
4. 4-way valve is switched back to its original position, followed by a 5 s delay.
   Step 3-4 runs three times.

The compressor is not included in the test cycle, nor can it be activated separately in function test mode. To run the compressor, exit the function test mode and create a need for the compressor to start it in a normal fashion.

SOLAR PLAZA
Solarsystemen und Wärmepumpen

BOSCH Compress 5800i AW12 OR-T ·erhältlich bei solarplaza.at

7 Work instructions ODU

CAUTION

Risk of injury!

If the front cover is removed and the heat pump remains energized, be cautious around the fan. A need can suddenly arise and trigger a start. Even without a need, the inverter sends a small current through the compressor motor windings to keep the compressor at a suitable temperature and ready for operation. When the heat pump is in idle mode, the inverter is passively cooled by the ambient air and handles this small load without issues. Should the inverter still become too hot, for instance due to high outdoor temperature, the fan will be activated to help cool the inverter. Serious injury to hand or fingers may occur.

- Keep hands away from moving parts.

NOTICE

Damage to the heat pump due to water!

Electrical connections and electronics can be damaged if they are exposed to water. The outer casing is a prerequisite for meeting the heat pump's IP rating

- If back cover, side covers, front cover or top cover are removed during service work, they must be reattached without delay as soon as the work is completed.

NOTICE

Risk of damage to components!

Heat sensitive components can be damaged when exposed to flame/heat while welding or brazing.

- Always use protection blankets and wet clothes to protect and cool heat sensitive components from flame/heat.

SOLAR PLAZA
Solarsystemen und Wärmepumpen

BOSCH Compress 5800i AW12 OR-T ·erhältlich bei solarplaza.at

7.1 Covers removal

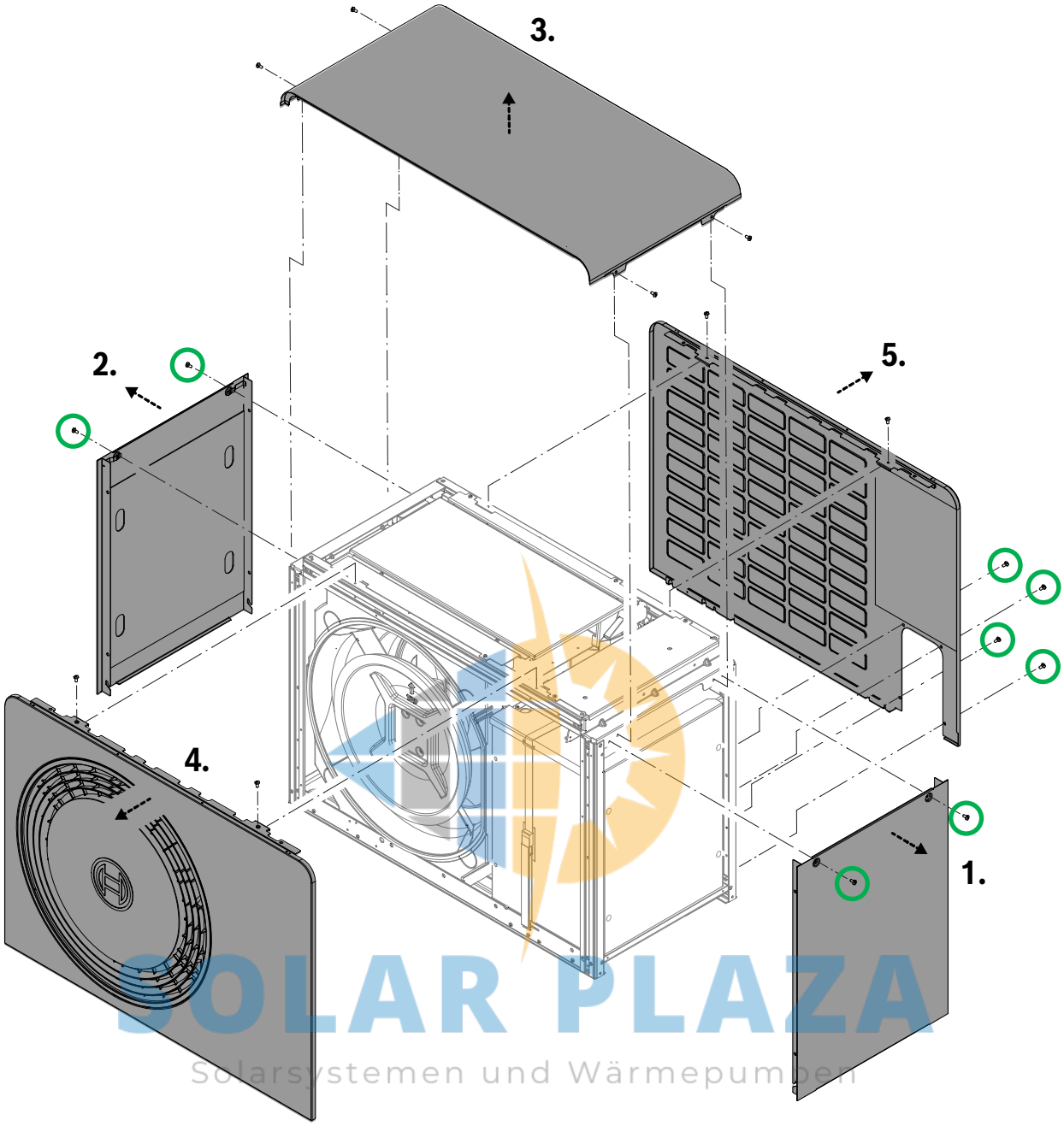

SOLAR PLAZA
Solarsystemen und Wärmepumpen

Step 1. Removal of right cover. 2 screws (Torx T25).
Step 2. Removal of left cover. 2 screws (Torx T25).
Step 3. Removal of top cover. 4 screws (Torx T25).
Step 4. Removal of front cover. 2 screws (Torx T25).
Step 5. Removal of back cover. 6 screws (Torx T25).
Step 6. Reassemble in reverse order.

NOTICE

Risk of rusty screws!

- Ensure that the eight screws that are exposed to the weather are the stainless steel ones. The stainless steel screws are marked in green in the image above.

BOSCH Compress 5800i AW12 OR-T ·erhältlich bei solarplaza.at

7.2 Interventions in refrigerant circuit

When working with the refrigerant circuit

- Be careful when putting your hands inside the refrigerant circuit compartment. The temperature of the discharge gas pipe from the compressor can exceed 100°C during operation.
- Before you start brazing, remove the cover plates.
- When connecting nitrogen, ensure that the flow is directed away from heat sensitive components while brazing.
- If the expansion valve is defective, oil can become trapped in the copper pipe that leads into the evaporator and we suggest using a pipe cutter to cut off the pipes (never use a saw). Blow out the oil using nitrogen and collect it in a vessel.

SOLAR PLAZA
Solarsystemen und Wärmepumpen

BOSCH Compress 5800i AW12 OR-T ·erhältlich bei solarplaza.at

7.2.1 Refrigerant box service access

The instruction begins at state where the covers are already removed from the ODU.

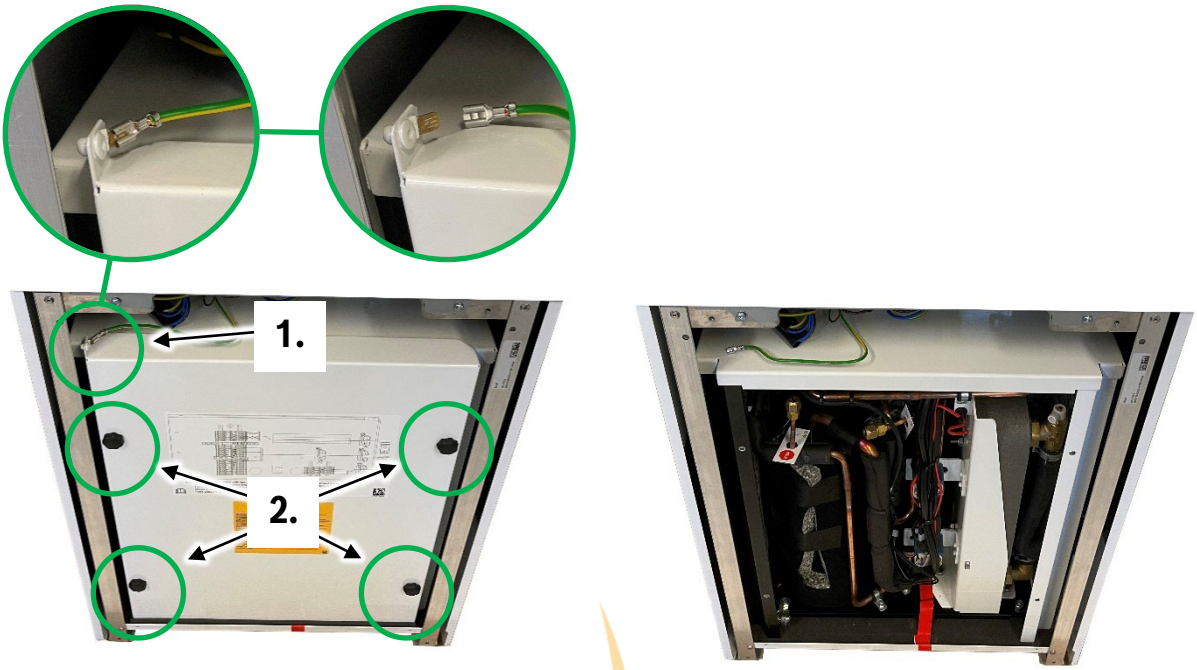

Step 1. Disconnect the ground cable from the refrigerant box side cover.
Step 2. Remove the refrigerant box side cover. 4 screws. Lift the refrigerant box side cover up and out through the frame.

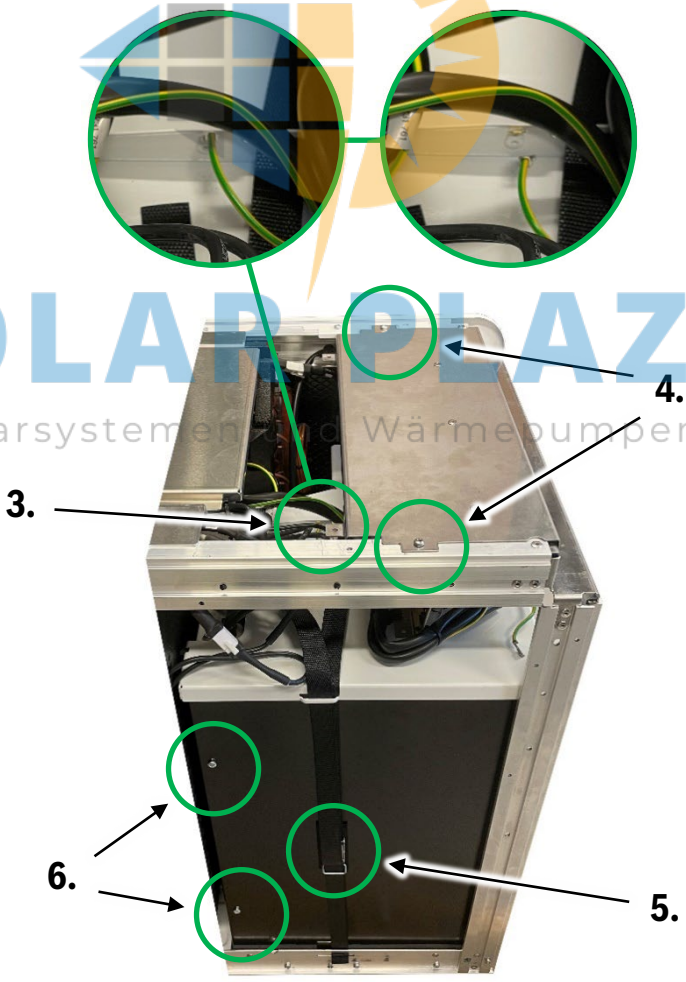

Step 3. Disconnect the ground cable from the refrigerant box top cover.
Step 4. Loosen the electrical box. 2 screws (Torx T25).

SOLAR PLAZA
Solarsysteme und Wärmepumpen

BOSCH Compress 5800i AW12 OR-T ·erhältlich bei solarplaza.at

Step 5. Remove the strap.
Step 6. Loosen the refrigerant box front cover. 2 screws (Torx T25).

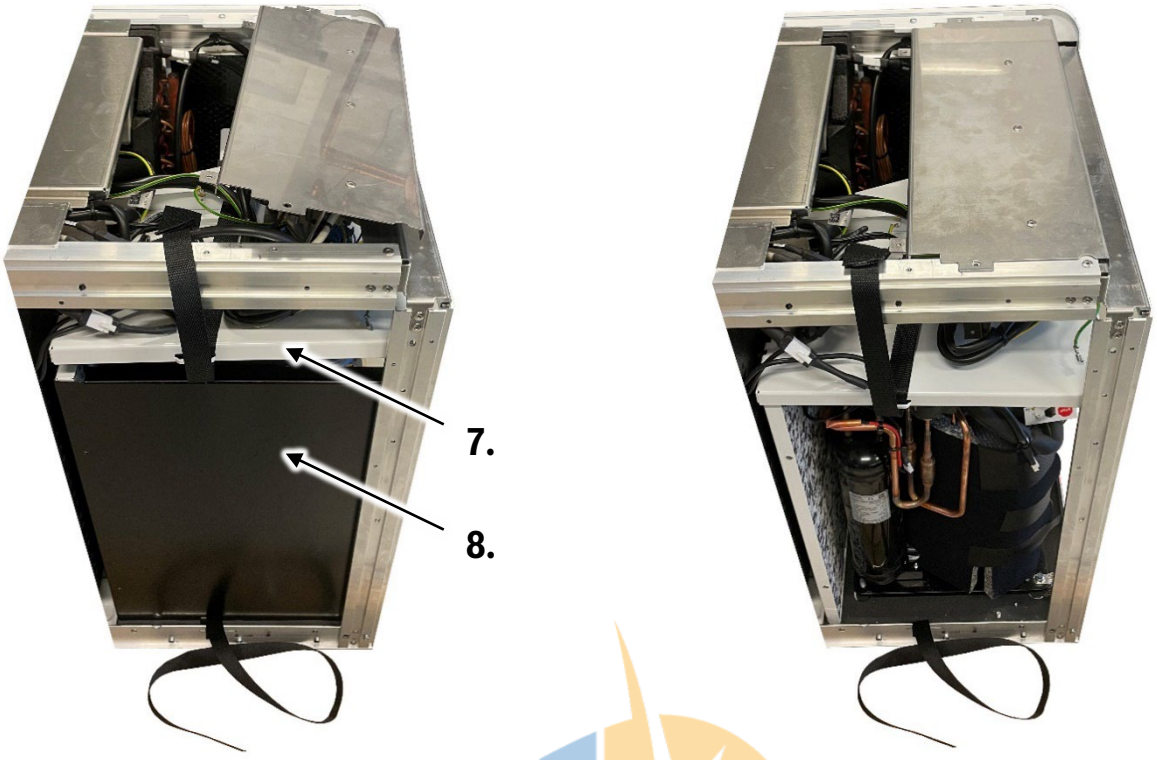

Step 7. Lift and hold the refrigerant box top cover.
Step 8. Lift the refrigerant box front cover up and out through the frame.

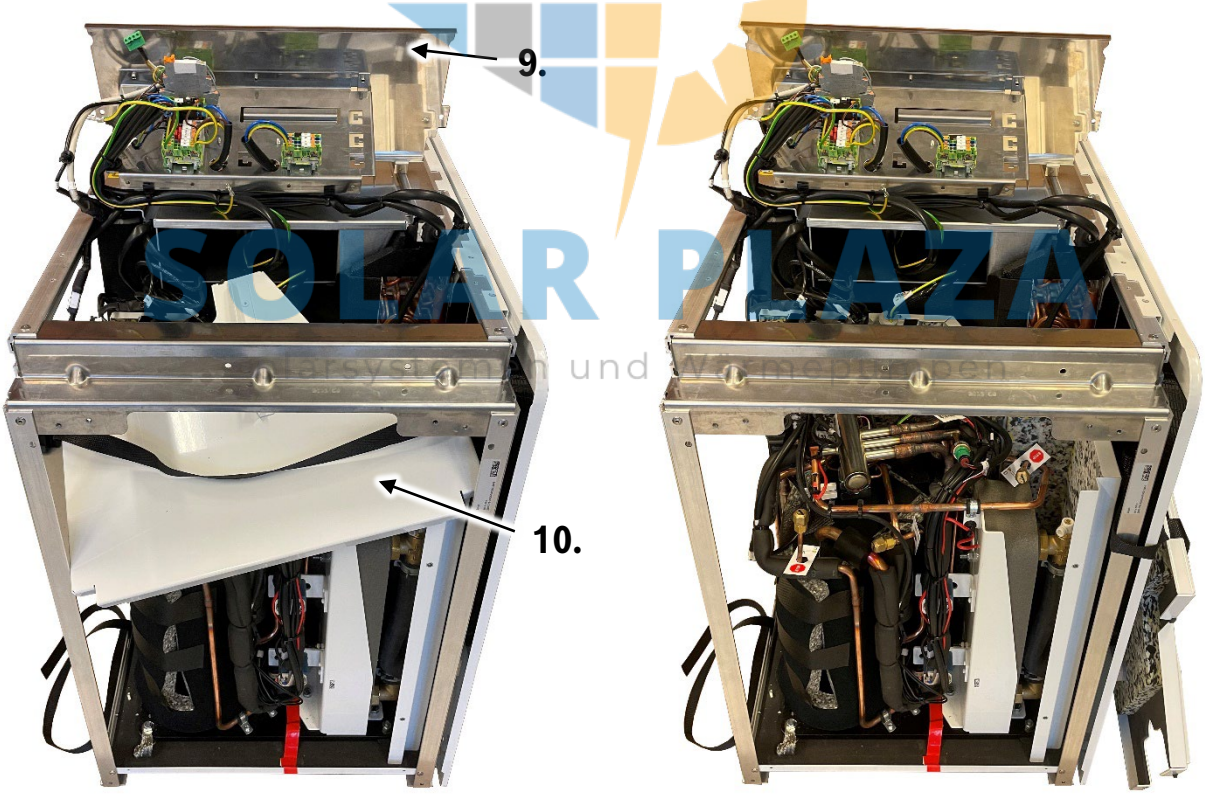

Step 9. Lift and put the electrical box on top of the ODU.
Step 10. Lift and tilt the refrigerant box top cover and pull it out through the frame.
Step 11. Reassemble in reverse order.

SOLAR PLAZA

BOSCH Compress 5800i AW12 OR-T ·erhältlich bei solarplaza.at

7.2.2 Material

We recommend the following material and maximum nitrogen pressure for service interventions, for this heat pump operating with the R290 refrigerant.

- Copper – copper connection (for example expansion valve), Brace Tec Silfos (5% Ag)
- Copper pipe – filter dryer, Brace Tec 5600 (56% Ag)
- Maximum nitrogen pressure for tightness control 20 bar.

7.2.3 Evacuation/filling of refrigerant

Step 1. Before work is started, set the desired room temperature to 0°C to stop the heat pump.
Step 2. Activate the function “Evacuate / fill”; **(1)** = Yes and then **(2)** = On, to open up the expansion valves.

```
Service/
  Diagnosis/
    Function test/
      Activate function tests {Yes, No}                    (1)
      Heat pump/
        Evacuate/fill/
          Evacuate/fill {Off, On}                          (2)
```

Leave the power on to the heat pump during the evacuation of the refrigerant and vacuuming the refrigerant system. The compressor heating starts when activating the function “Evacuate/Fill”. The compressor heating will help to boil off the refrigerant bound in the compressor oil.

Step 3. Evacuate the refrigerant with a refrigerant recovery machine (pump flow rate 16kg/h, vapor). When evacuating, use the Schrader valves 1 and 2. The Schrader valves are also numbered in the principle sketch on page 9.
Step 4. Vacuum the refrigerant system for at least 30 minutes to minimize the amount of refrigerant bound in the compressor oil. Use the Schrader valves 1 and 2 when vacuum the refrigerant system.
Step 5. Break the power to the heat pump.

SOLAR PLAZA
Solarsystemen und Wärmepumpen

BOSCH Compress 5800i AW12 OR-T ·erhältlich bei solarplaza.at

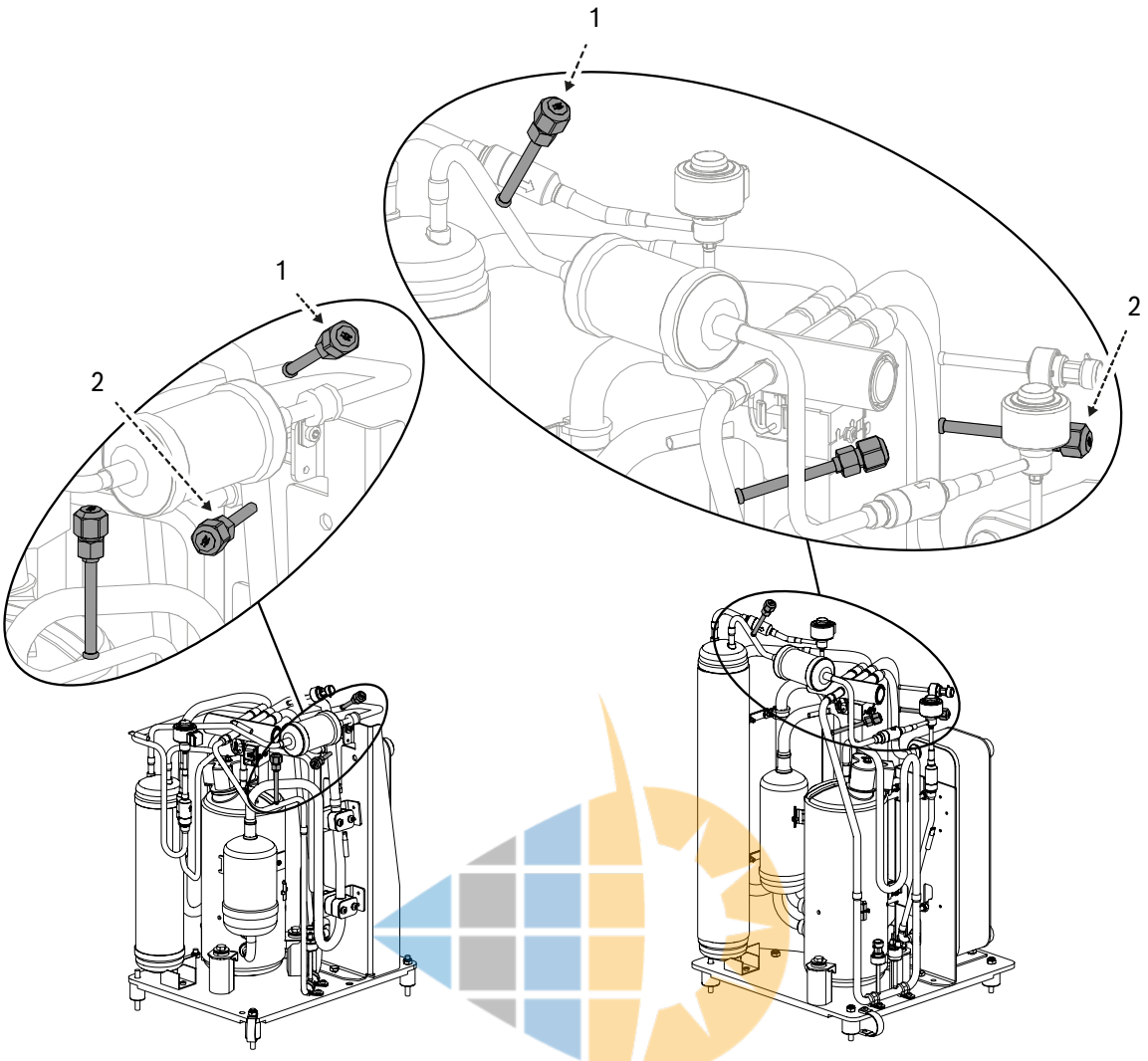

Schrader valve positions (small chassis)

Schrader valve positions (big chassis)

7.2.4 Filter dryer installation

Always install a filter dryer after an intervention in the refrigerant circuit.

7.2.4.1 ODU small chassis

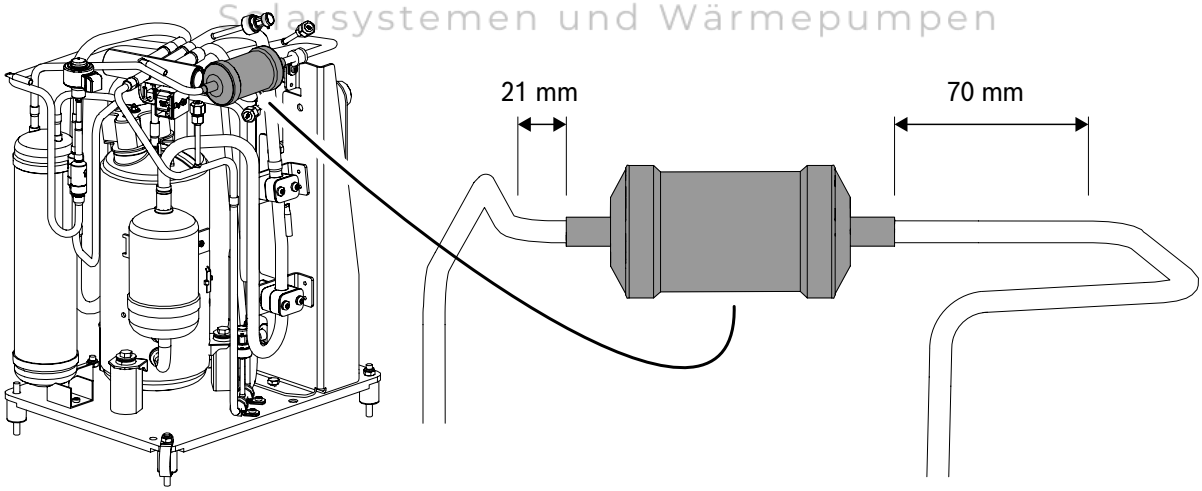

Refrigerant circuit

Distances between bends and filter dryer

SOLAR PLAZA
Solarsystemen und Wärmepumpen

BOSCH Compress 5800i AW12 OR-T ·erhältlich bei solarplaza.at

7.2.4.2 ODU big chassis

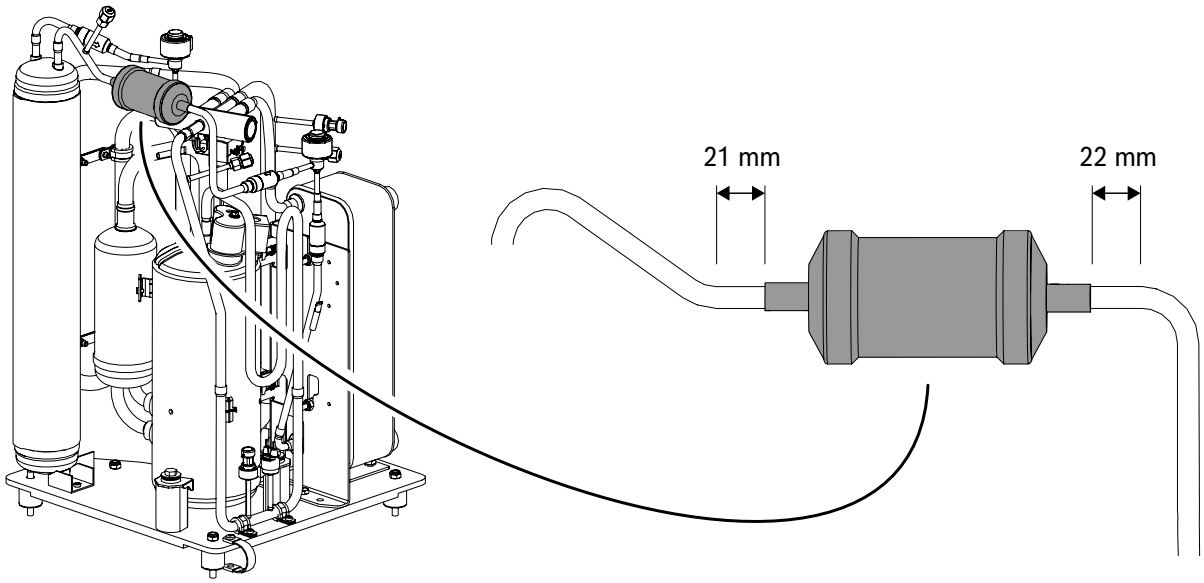

Refrigerant circuit

Distances between bends and filter dryer

7.2.5 Evacuate to vacuum before filling the refrigerant

Vacuum from Schrader valves 1 and 2. Vacuum pressure 1.33 mbar/1000 micron or lower.

7.2.6 Filling amount

The original filling amount is stated on the type plate located on the back of the ODU. An extra amount of 50g must be added to the original amount after filter dryer assembly. Always use new refrigerant.

SOLAR PLAZA
Solarsystemen und Wärmepumpen

BOSCH Compress 5800i AW12 OR-T ·erhältlich bei solarplaza.at

7.3 Compressor [ER1] replacement

NOTICE

Risk of damage to the compressor!

- Ensure that the compressor phases (U, V, W) are connected correctly to the compressor at installation. The cable marking must correspond to the gasket marking.

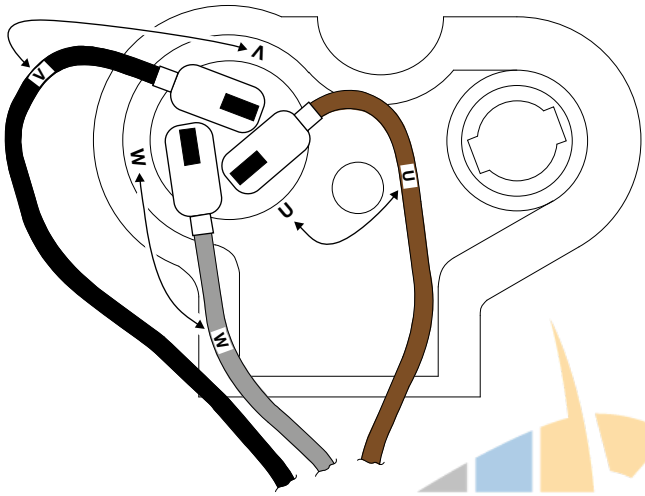

- Ensure that the compressor phases (U, V, W) are connected correctly to the inverter at installation. The cable marking must correspond to the inverter marking.

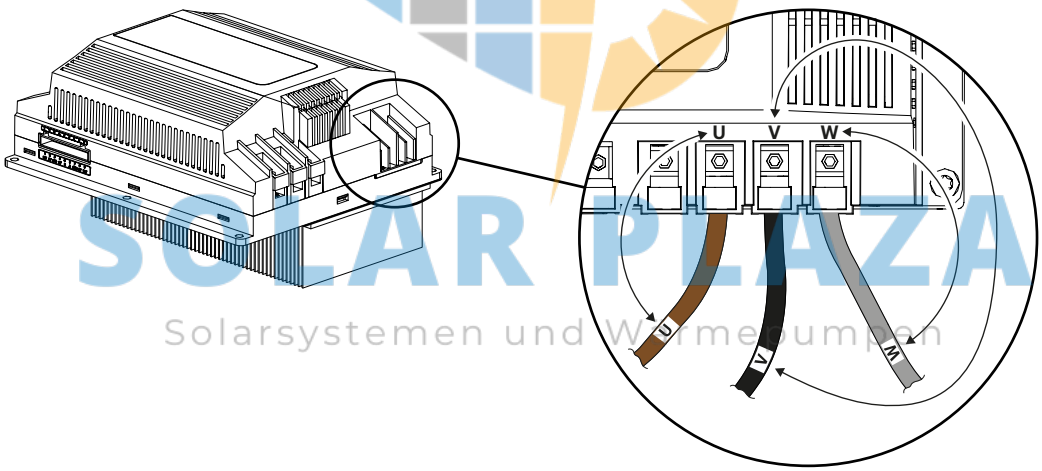

SOLAR PLAZA
Solarsystemen und Wärmepumpen

BOSCH Compress 5800i AW12 OR-T ·erhältlich bei solarplaza.at

7.3.1.1 ODU small chassis

Step 1. Remove the covers, see section 7.2 Covers removal.
Step 2. Get access to the refrigerant box, see section 7.2.1 Refrigerant box service access.

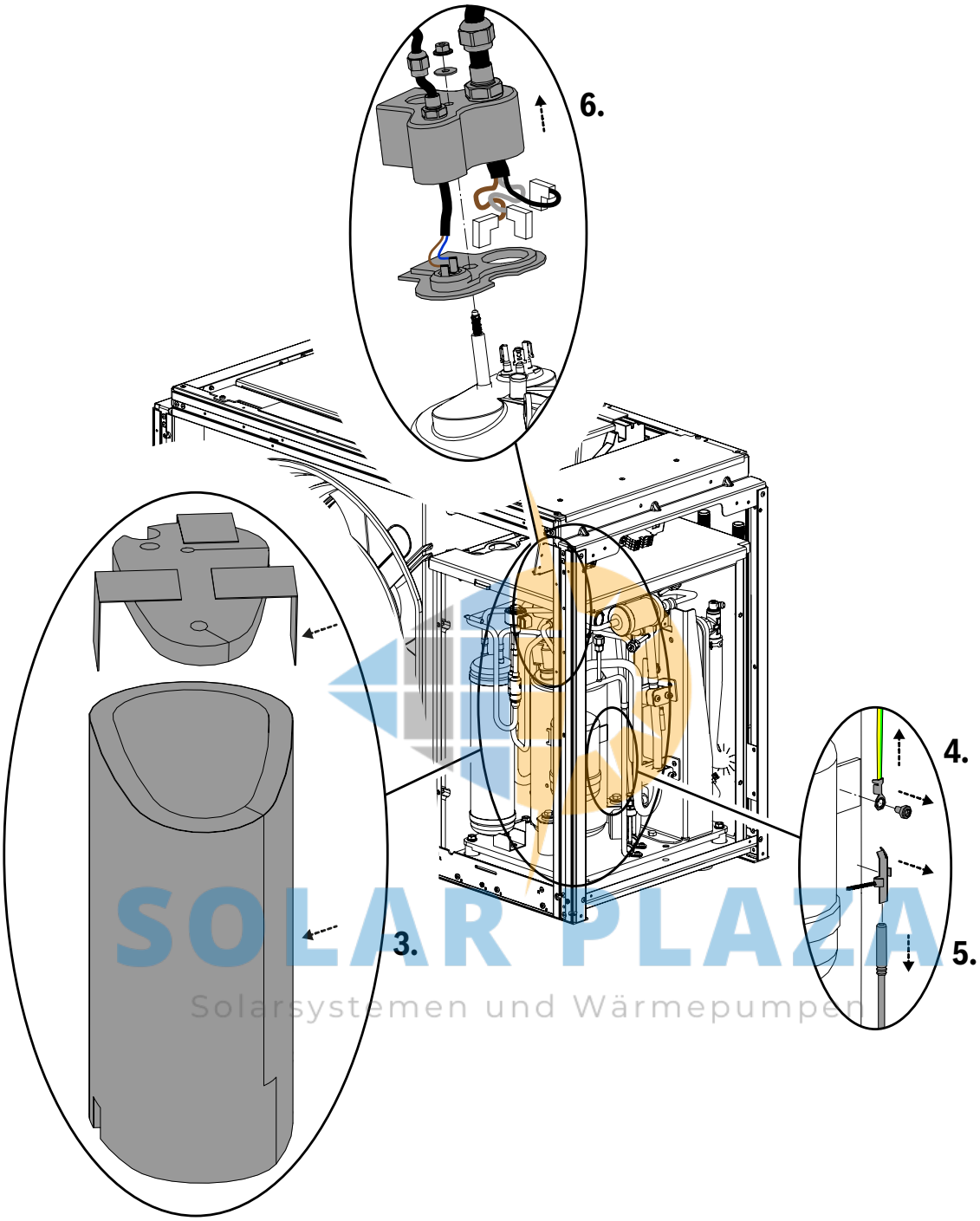

Step 3. Remove the insulation from the compressor.
Step 4. Disconnect the ground cable from the compressor.
Step 5. Remove the compressor body temperature sensor.
Step 6. Remove the plastic lid to the compressor's electrical connections and disconnect the electrical cabling from the compressor.

SOLAR PLAZA
Solarsystemen und Wärmepumpen

BOSCH Compress 5800i AW12 OR-T ·erhältlich bei solarplaza.at

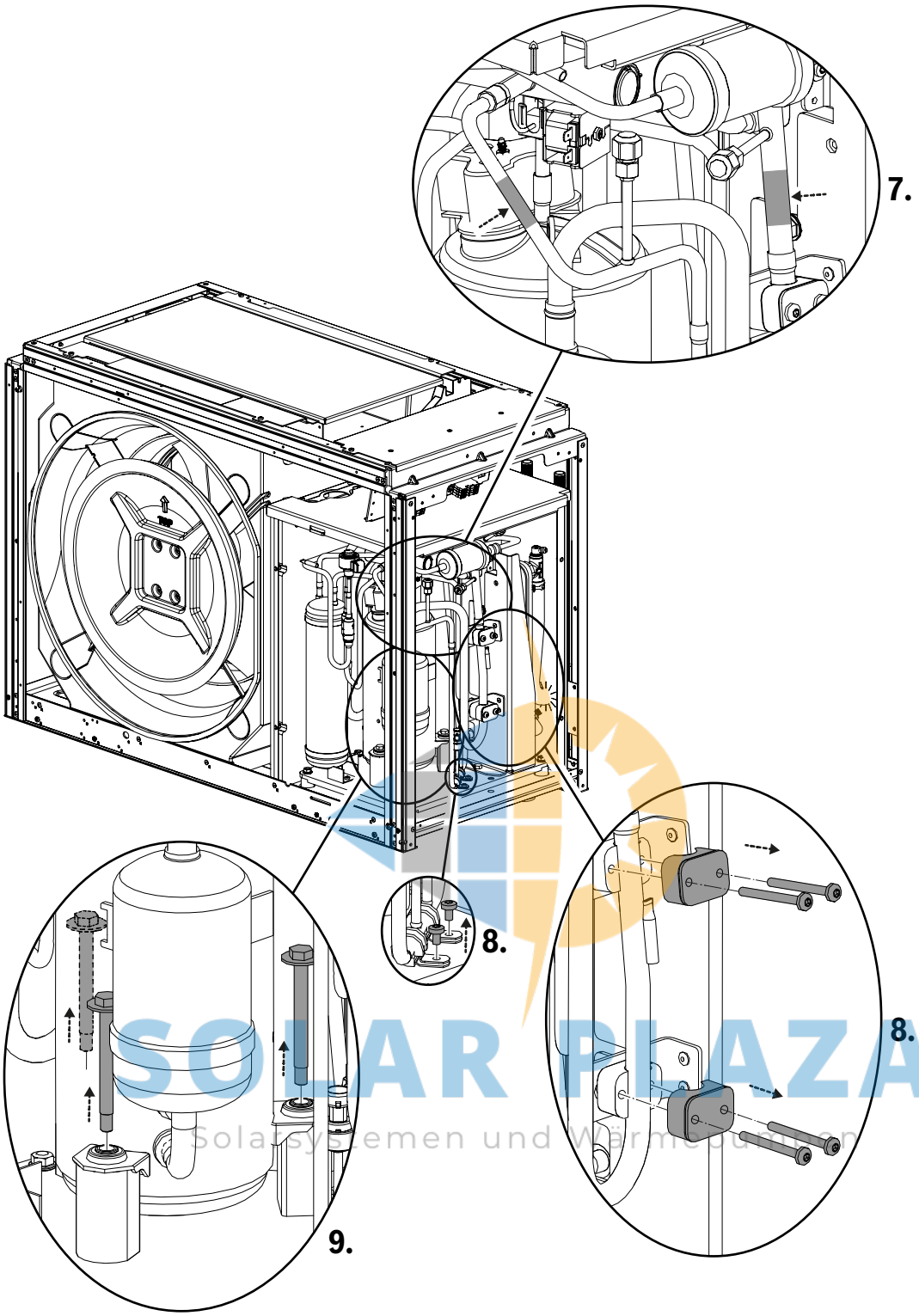

Step 7. To be able to remove the compressor out from the refrigerant circuit two pipes must be cut off. Use a pipe cutter and cut the pipes at the positions shown in the figure above.
Step 8. Open the pipe holders.
Step 9. Remove the 3 bolts holding the compressor.

SOLAR PLAZA
Solarsystemen und Wärmepumpen

BOSCH Compress 5800i AW12 OR-T ·erhältlich bei solarplaza.at

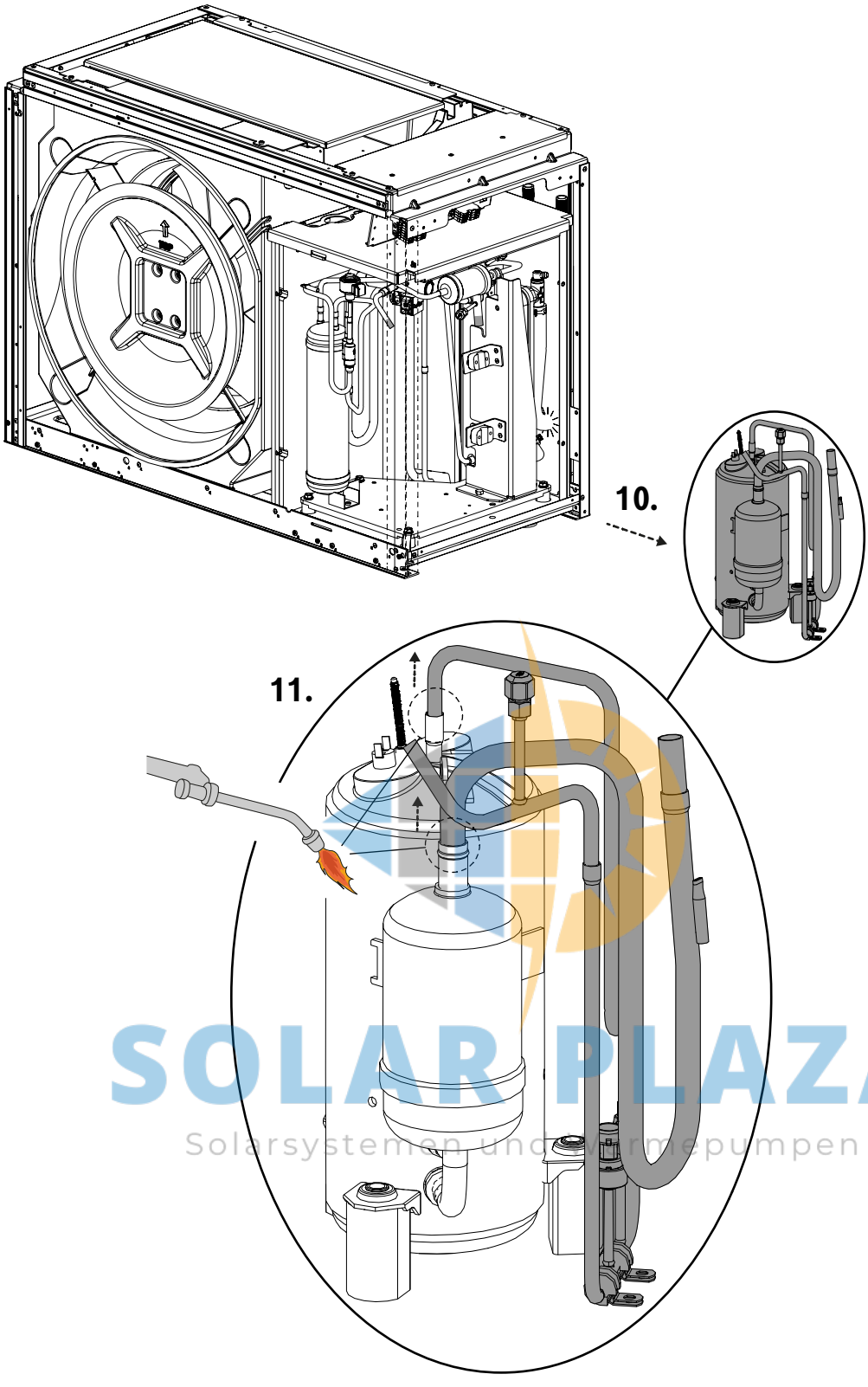

Step 10. Remove the compressor and attached pipes out of the refrigerant circuit.
Step 11. Remove the suction line and discharge pipes from the compressor by heating up the solder joints.
Step 12. Reassemble in reverse order. Ensure that the compressor cables are reinstalled in correct colour order.

SOLAR PLAZA
Solarsysteme und Wärmepumpen

BOSCH Compress 5800i AW12 OR-T ·erhältlich bei solarplaza.at

7.3.1.2 ODU big chassis

Step 1. Remove the covers, see section 7.2 Covers removal.
Step 2. Get access to the refrigerant box, see section 7.2.1 Refrigerant box service access.

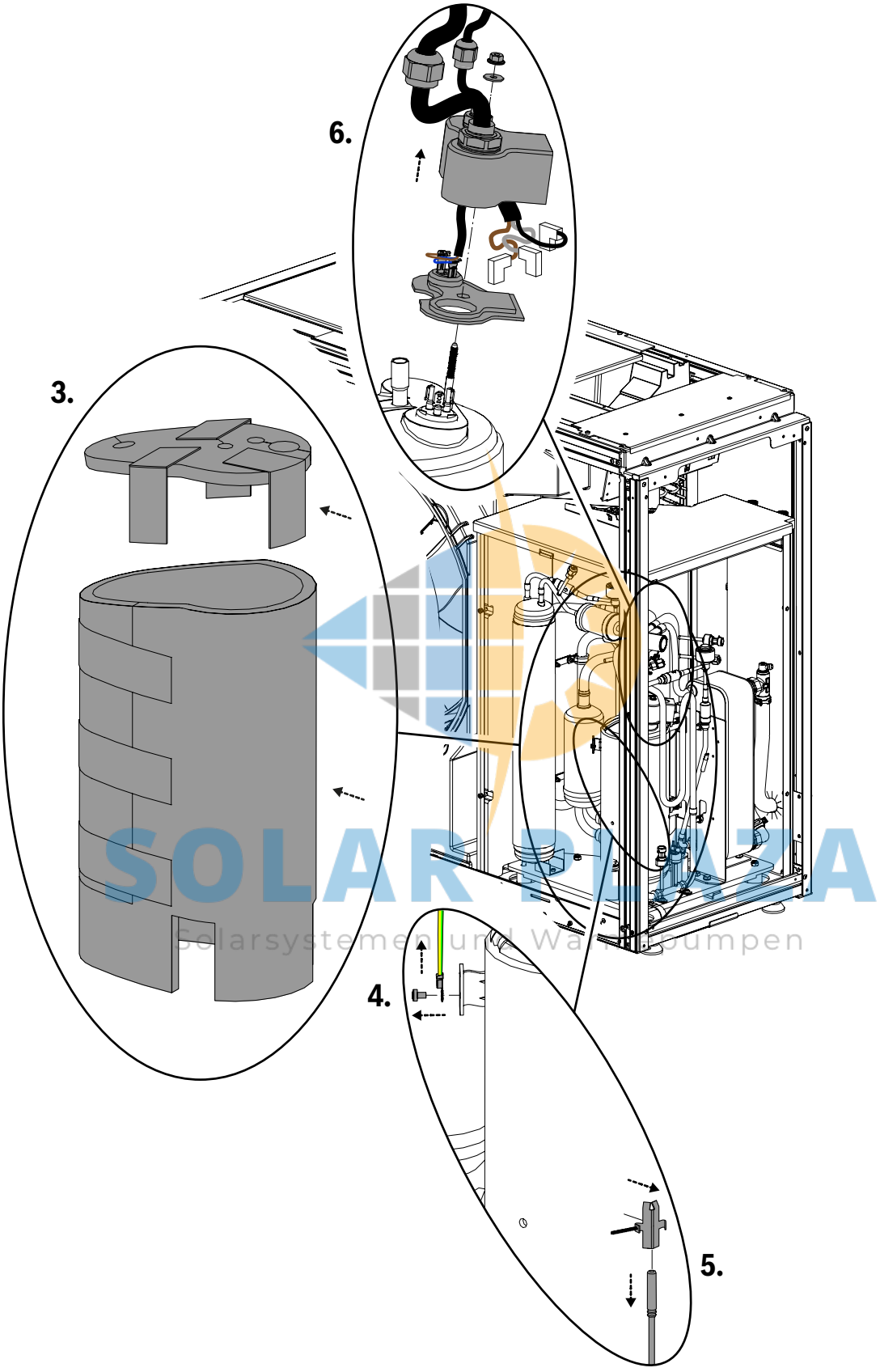

SOLAR PLAZA
Solarsysteme und Wärmepumpen

BOSCH Compress 5800i AW12 OR-T ·erhältlich bei solarplaza.at

Step 3. Remove the insulation from the compressor.
Step 4. Disconnect the ground cable from the compressor.
Step 5. Remove the compressor body temperature sensor.
Step 6. Remove the plastic lid to the compressor's electrical connections and disconnect the electrical cabling from the compressor.

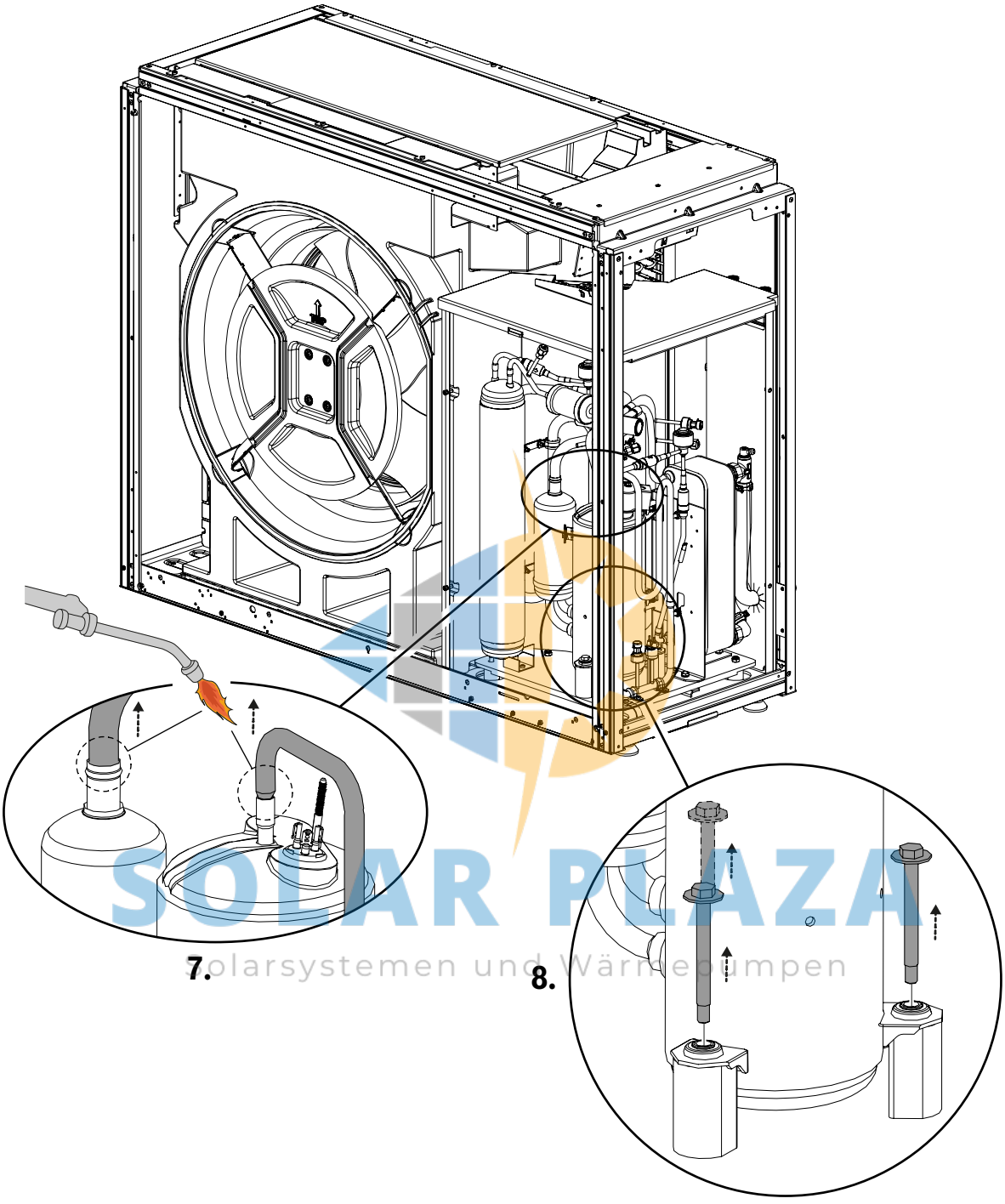

SOLAR PLAZA
Solarsystemen und Wärmepumpen

Step 7. Remove the suction line and discharge pipes from the compressor by heating up the solder joints.
Step 8. Remove the 3 bolts holding the compressor.

BOSCH Compress 5800i AW12 OR-T ·erhältlich bei solarplaza.at

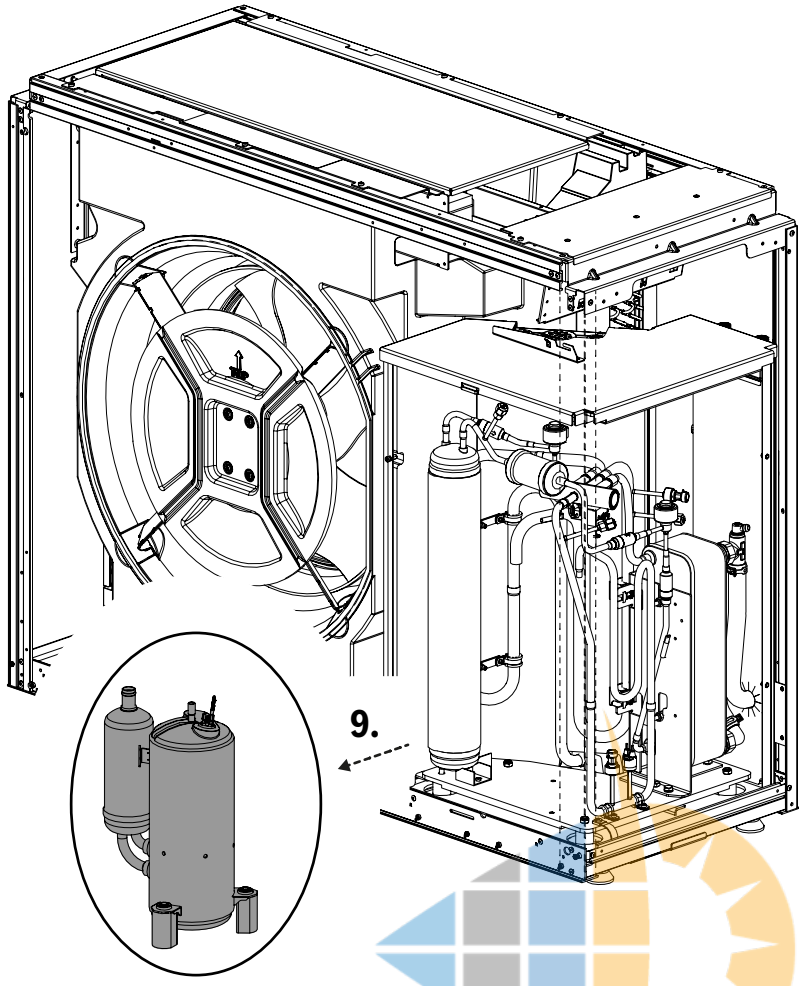

Step 9. Remove the compressor out of the refrigerant circuit.
Step 10. Reassemble in reverse order. Ensure that the compressor cables are reinstalled in correct colour order.

7.4 4-way valve [VR4] replacement

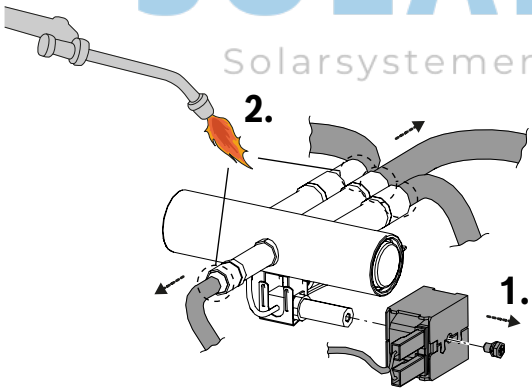

Step 1. Remove the coil from the 4-way valve.
Step 2. Remove the pipes from the 4-way valve by heating up the solder joints.
Step 3. Replace the 4-way valve.
Step 4. Reassemble in reverse order.

SOLAR PLAZA
Solarsystemen und Wärmepumpen

BOSCH Compress 5800i AW12 OR-T ·erhältlich bei solarplaza.at

7.5 Evaporator [EL1] replacement

Step 1. Remove the covers, see section 7.2 Covers removal.
Step 2. Get access to the refrigerant box, see section 7.2.1 Refrigerant box service access.

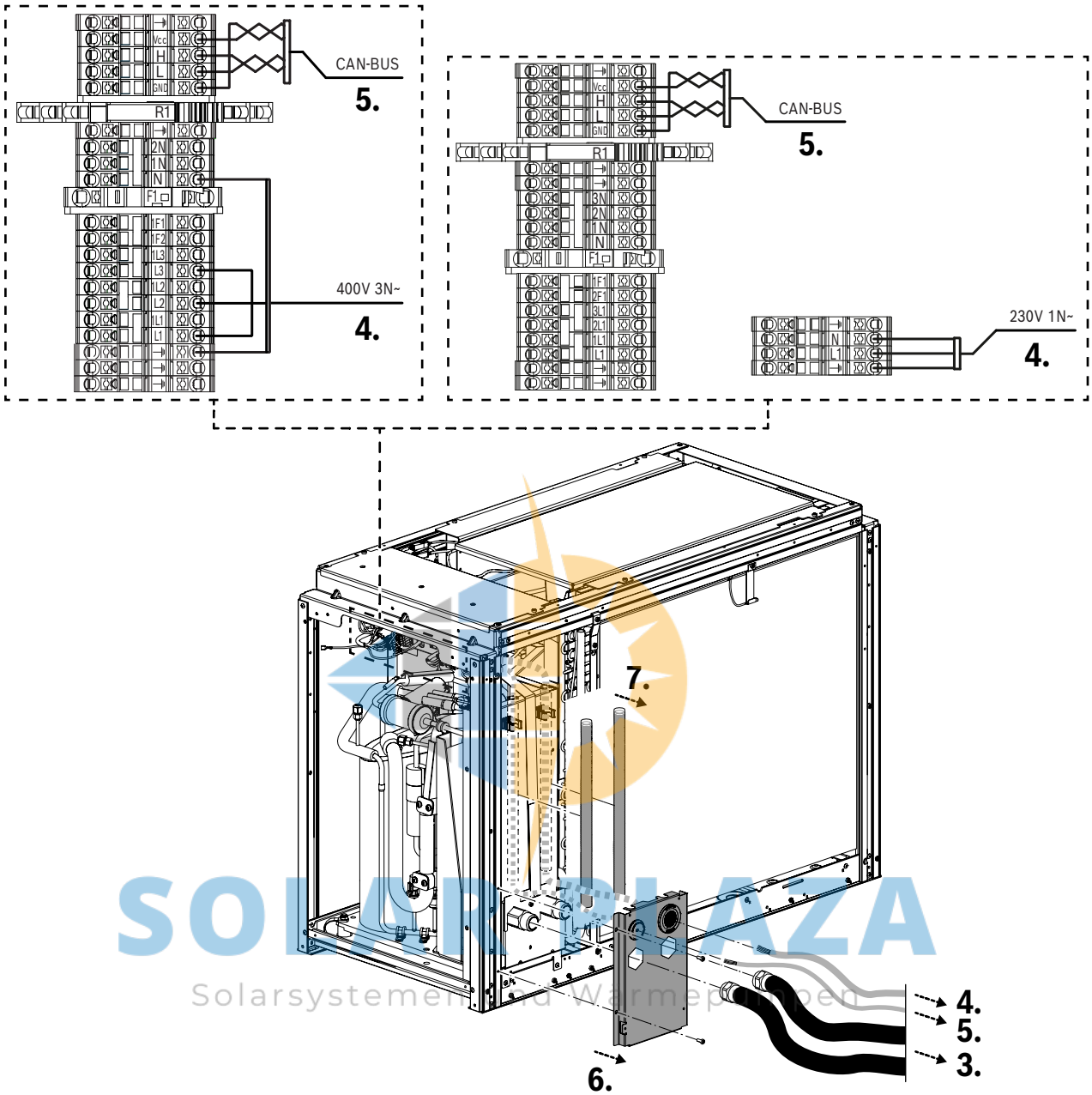

Step 3. Disconnect the heat transfer medium pipes.
Step 4. Disconnect the power supply cable.
Step 5. Disconnect the CAN-BUS cable.
Step 6. Remove the cover. 2 screws (Torx T25).
Step 7. Remove the cable pipes.

SOLARPLAZA
Solarsysteme und Wärmepumpen

BOSCH Compress 5800i AW12 OR-T ·erhältlich bei solarplaza.at

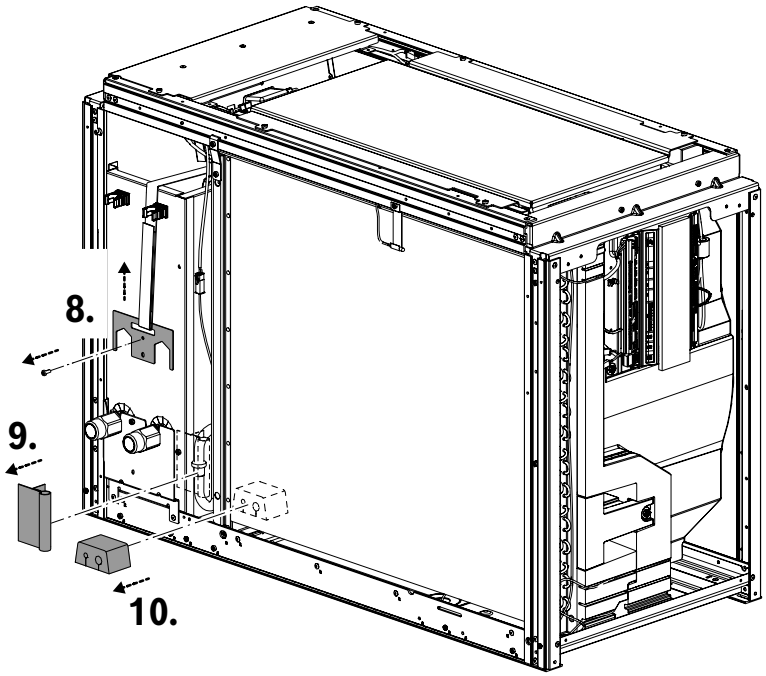

Step 8. Remove the cover. 1 screw (Torx T25).
Step 9. Remove the vibration damping tape.
Step 10. Remove the gasket.

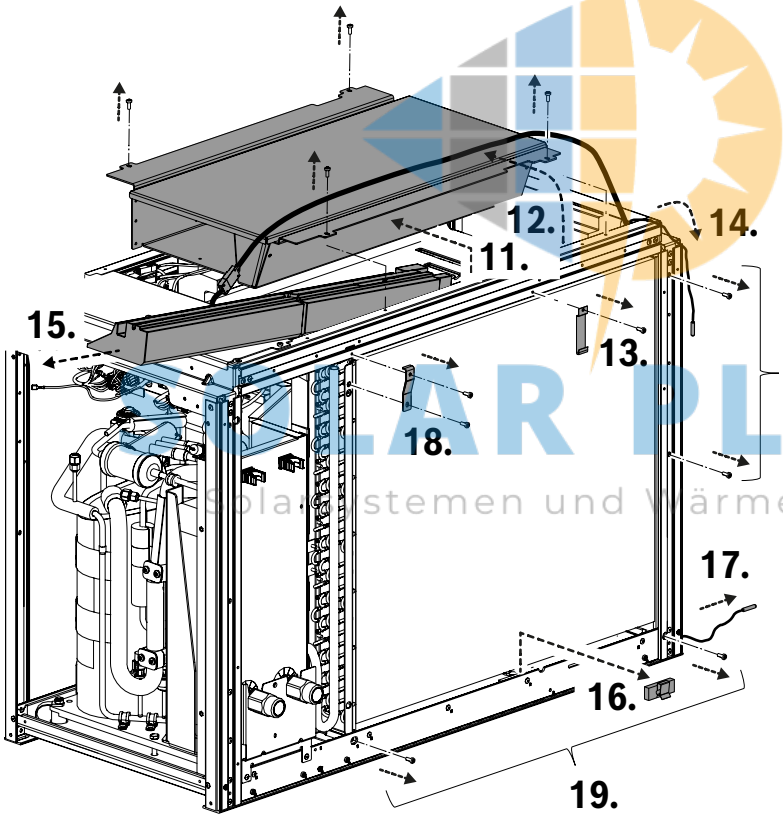

Step 11. Loosen, lift, and put the electrical box on top of the frame. 4 screws (Torx T25).
Step 12. Move the cable from the insulation to the top of the electrical box.
Step 13. Remove the sensor from the holder and remove the holder. 1 screw (Torx T25).
Step 14. Remove the sensor cable from the insulation and let it hang out on top of the frame.
Step 15. Remove the insulation.
Step 16. Remove the sensor from the holder and remove the holder.
Step 17. Remove the sensor out of the frame.
Step 18. Remove the bracket. 2 screws (Torx T25).
Step 19. Loosen the evaporator. 4 screws (Torx T25).

BOSCH Compress 5800i AW12 OR-T ·erhältlich bei solarplaza.at

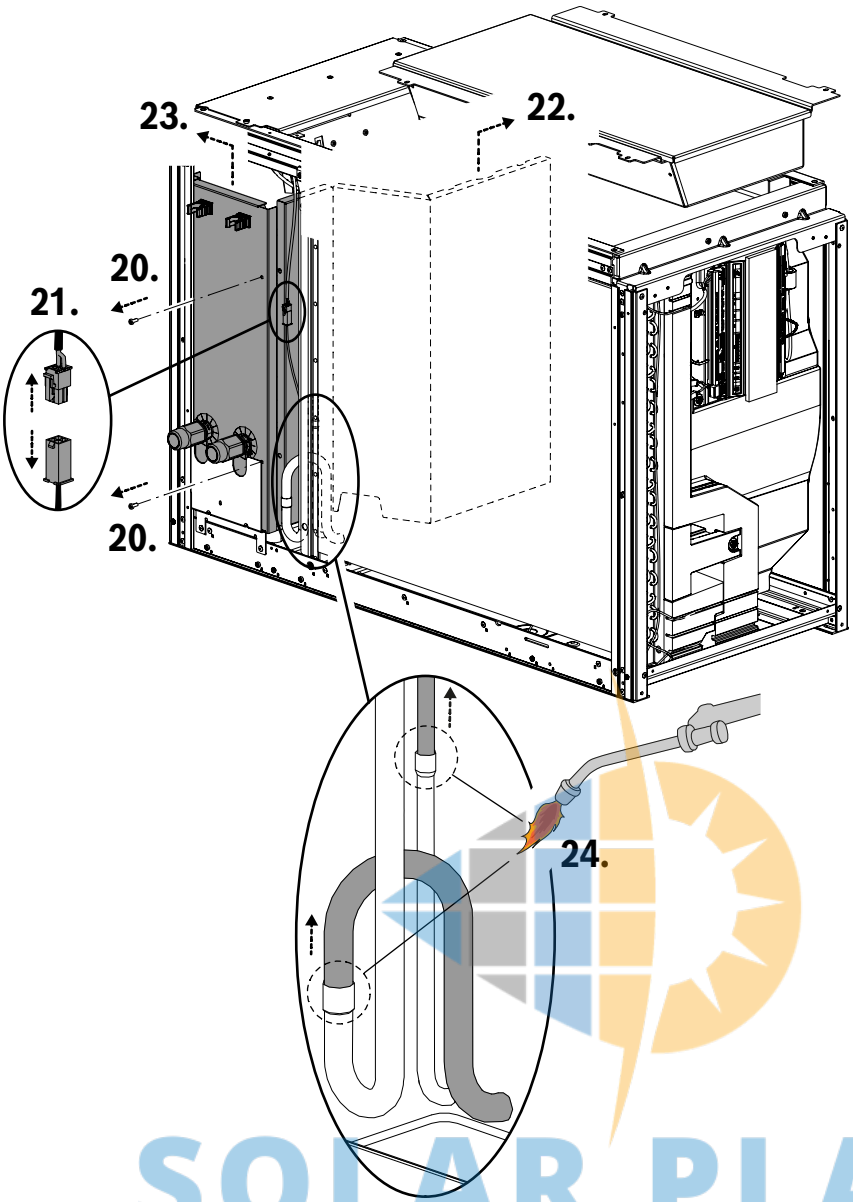

SOLAR PLAZA
Solaranlagen und Wärmepumpen

Step 20. Loosen the refrigerant box left and back covers. 2 screws (Torx T25).
Step 21. Disconnect the drip tray heater cable.
Step 22. Lift the refrigerant box left cover up and out a bit to the front.
Step 23. Lift the refrigerant box back cover up and to the left.
Step 24. Remove the pipes from the evaporator by heating up the solder joints.

NOTICE

Risk of damaged insulation!

- Ensure that the fan back EPP insulation is protected from flame/heat. Always use protection blankets and wet clothes to protect and cool the EPP insulation.

BOSCH Compress 5800i AW12 OR-T ·erhältlich bei solarplaza.at

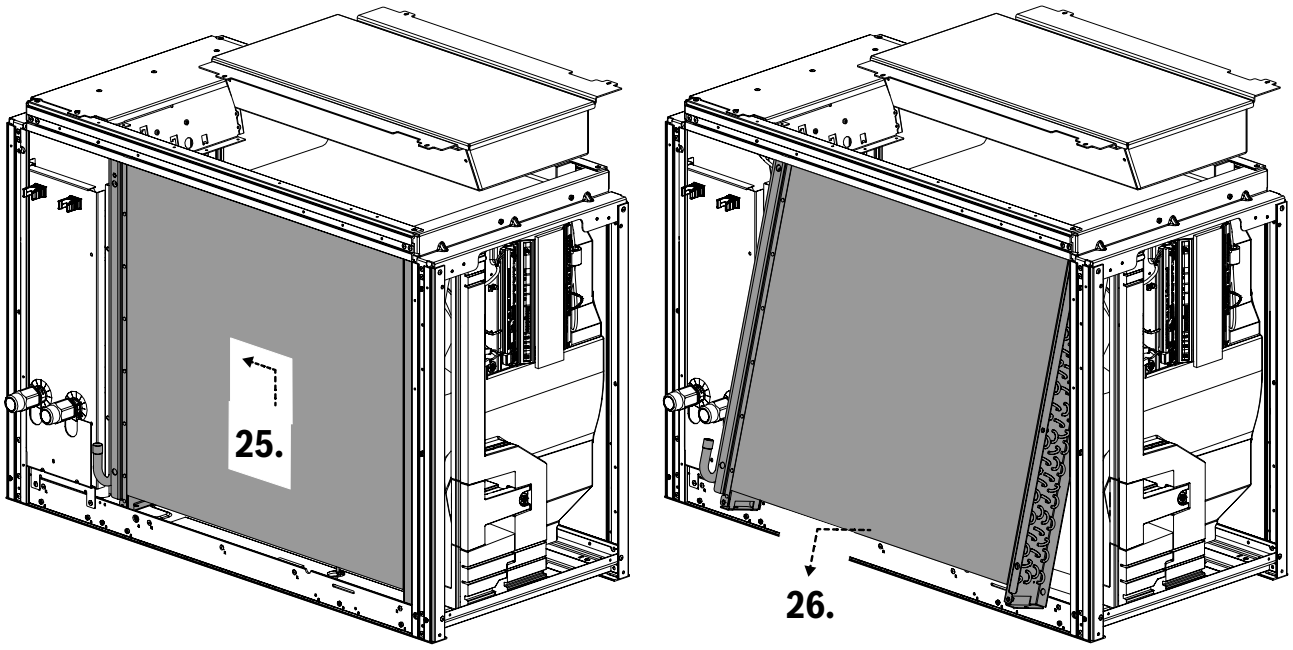

Step 25. Lift the evaporator and move it to the left.
Step 26. Tilt the evaporator bottom out and lift it out of the frame.
Step 27. Reassemble in reverse order.

SOLAR PLAZA
Solarsystemen und Wärmepumpen

BOSCH Compress 5800i AW12 OR-T ·erhältlich bei solarplaza.at

7.6 Fan [PL3] replacement

Step 1. Remove the covers, see section 7.2 Covers removal.

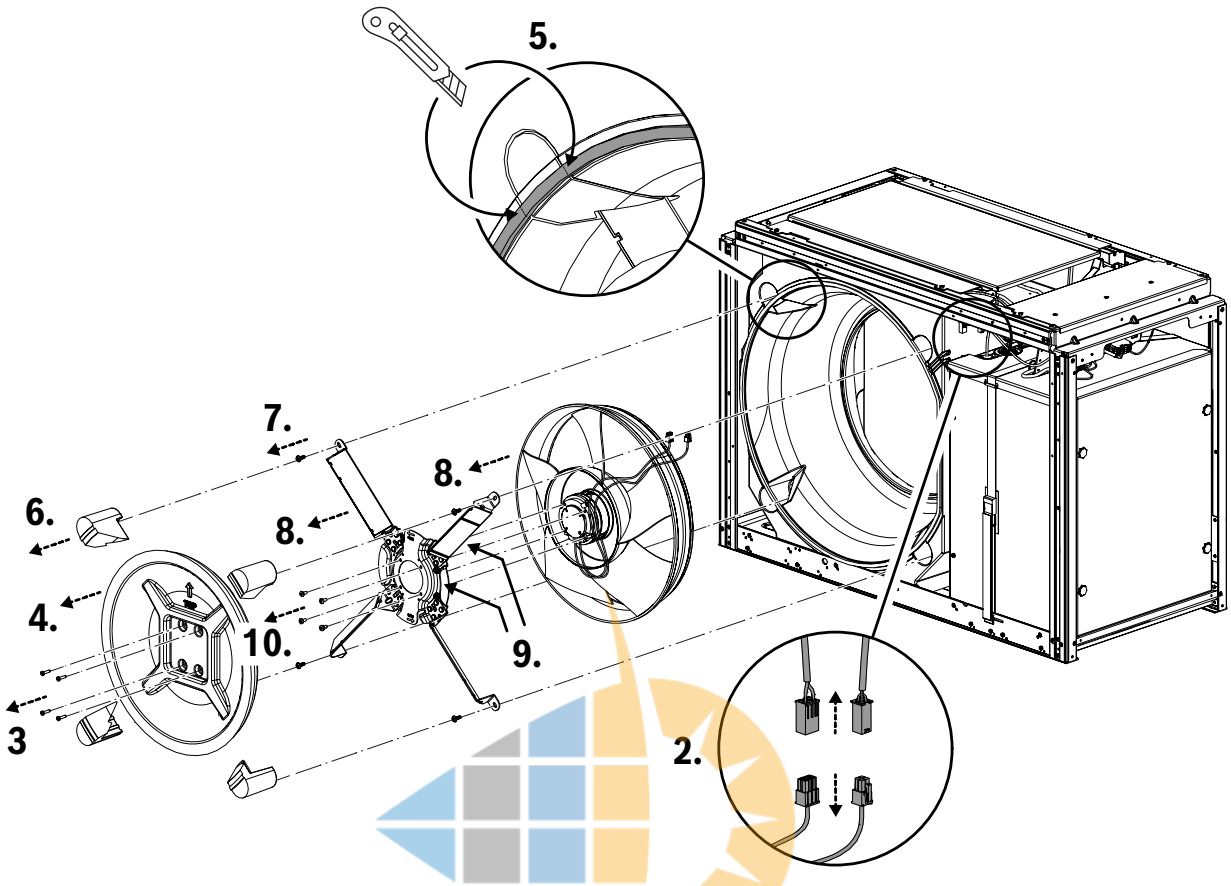

Step 2. Disconnect the two cables for the fan.
Step 3. Remove the 4 screws (Torx T25).
Step 4. Remove the insulation cone.
Step 5. Cut the insulation ring to be able to remove the 4 insulation parts.
Step 6. Remove the 4 insulation parts.
Step 7. Remove the 4 screws (Torx T30).
Step 8. Remove the fan frame and fan.
Step 9. Remove the 4 cable ties.
Step 10. Remove the 4 screws (Torx T30).
Step 11. Replace the fan.
Step 12. Reassemble in reverse order.

SOLAR PLAZA
Solarsystemen und Wärmepumpen

BOSCH Compress 5800i AW12 OR-T ·erhältlich bei solarplaza.at

7.7 Drip tray heater [EA0] replacement

As an alternative to the described procedure the evaporator can be removed from the appliance to get access to the drip tray heater, see section 7.5 Evaporator [EL1] replacement.

CAUTION

Risk of damaged evaporator fins and risk of injury!

The evaporator aluminium fins are thin, sensitive and very sharp. They can easily be damaged due to careless handling or can cause injuries on hands.

- Never use hard objects.
- Never rub the fins directly with a cloth.
- Always wear protective gloves.

Step 1. Switch off the power to the appliance.
Step 2. Remove the covers, see section 7.2 Covers removal.

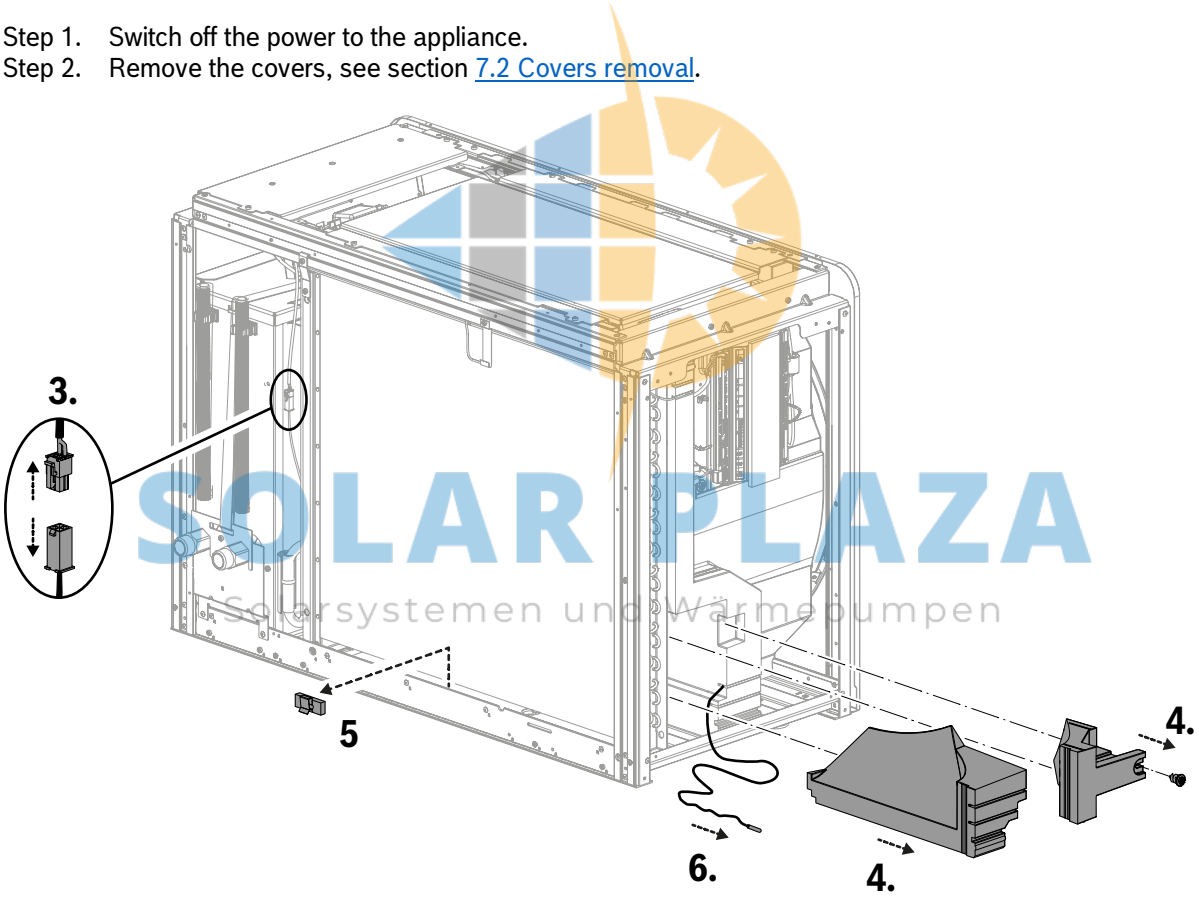

Step 3. Disconnect the drip tray heater cable.
Step 4. Remove the screw and the 2 insulation parts.
Step 5. Remove the sensor from the holder and remove the holder.
Step 6. Remove the sensor out of the frame.

SOLAR PLAZA
Solarsystemen und Wärmepumpen

BOSCH Compress 5800i AW12 OR-T ·erhältlich bei solarplaza.at

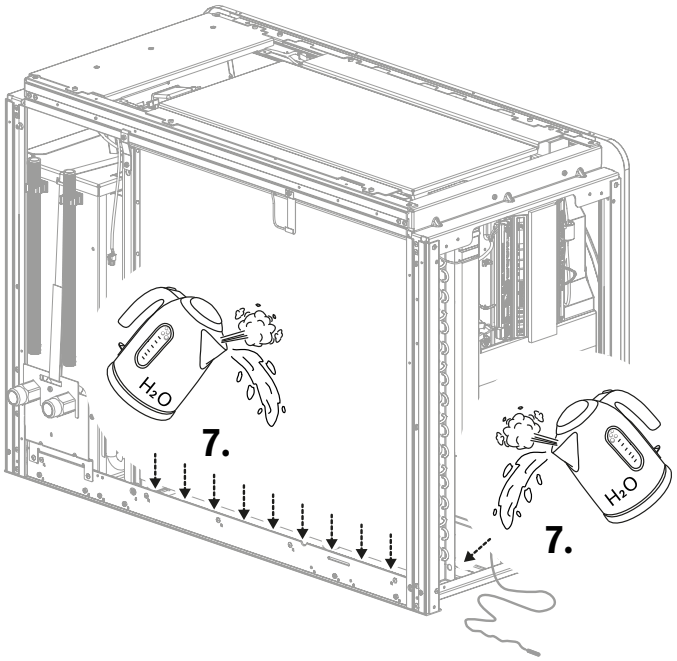

Step 7. Pour approx. 1-2 litres of >60°C water on the drip tray heater to loosen the adhesive.

CAUTION

Risk of scalding!

- Take care when pouring the hot water on the drip tray heater.

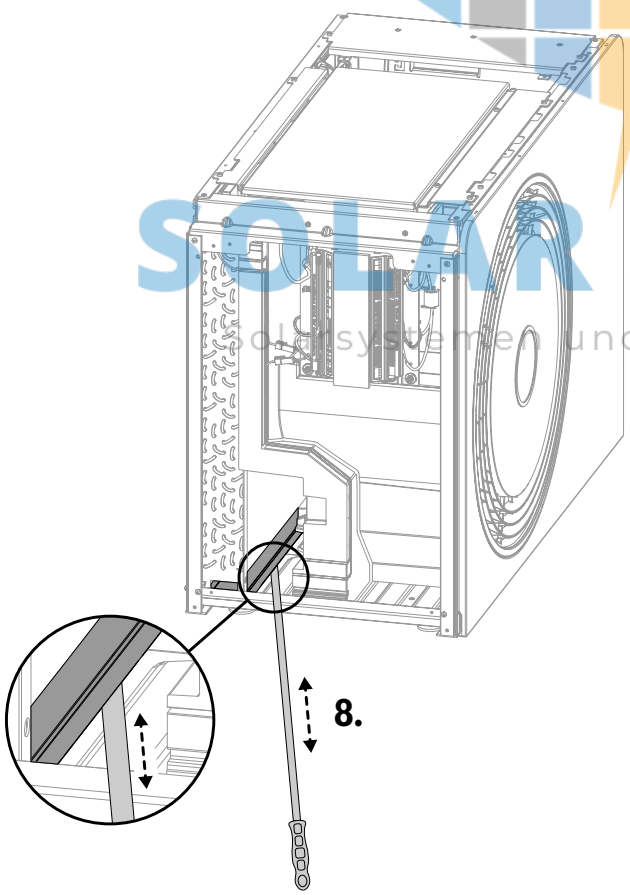

SOLAR PLAZA
Solarsystemen und Wärmepumpen

BOSCH Compress 5800i AW12 OR-T ·erhältlich bei solarplaza.at

Step 8. Use the tool (TTNR 7719002326) to scrape off the drip tray heater and adhesive. Be careful to not scratch the bottom plate paint.
Step 9. Remove, as much as possible, left over adhesive and dry the bottom plate thoroughly.
Step 10. If the appliance has aluminium tape applied on the bottom plate on top of the rivets, and it has been removed during the removal of the drip tray heater, new aluminium tape must be attached on top of the rivets.

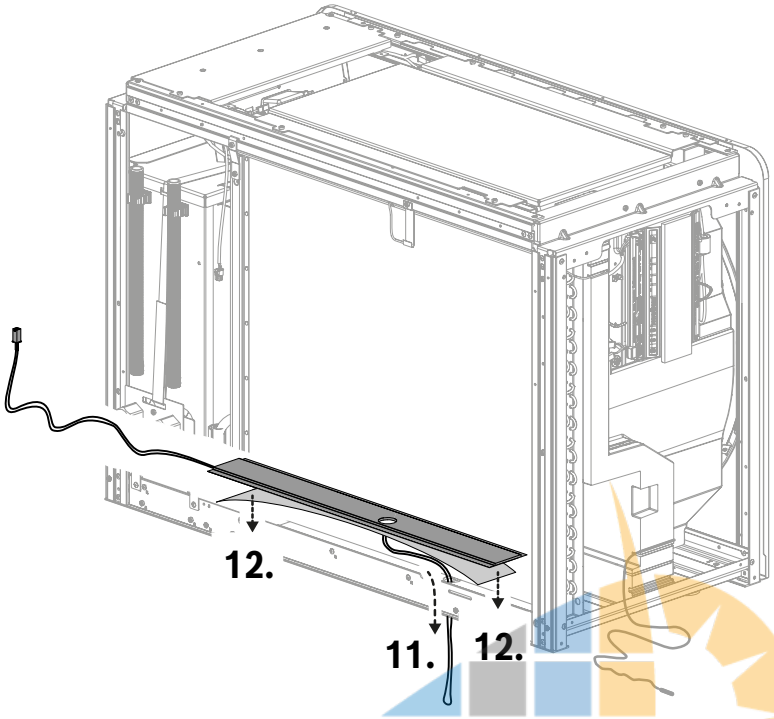

Step 11. Thread the drip tray heater cable through the hole in the bottom plate.
Step 12. Peel off the cover film on the drip tray heater.

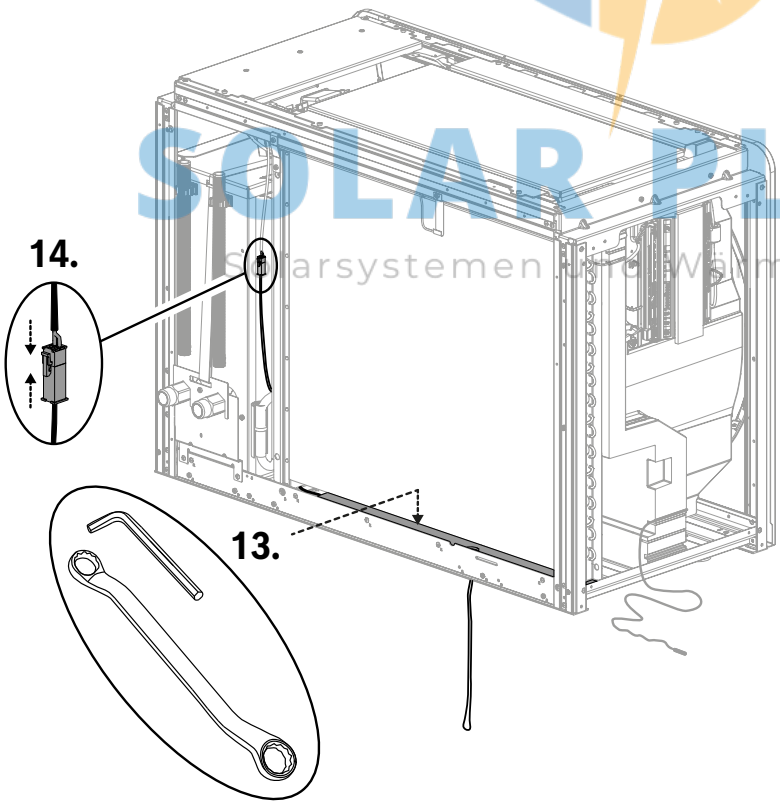

Step 13. Insert the drip tray heater and press it down by using a non-sharp tool e.g. an allen key or an offset ring spanner. The drip tray heater should stick to the bottom plate and not be wrinkled.

SOLAR PLAZA
Solarsysteme & Wärmepumpen

BOSCH Compress 5800i AW12 OR-T ·erhältlich bei solarplaza.at

Step 14. Connect the drip tray heater cable.

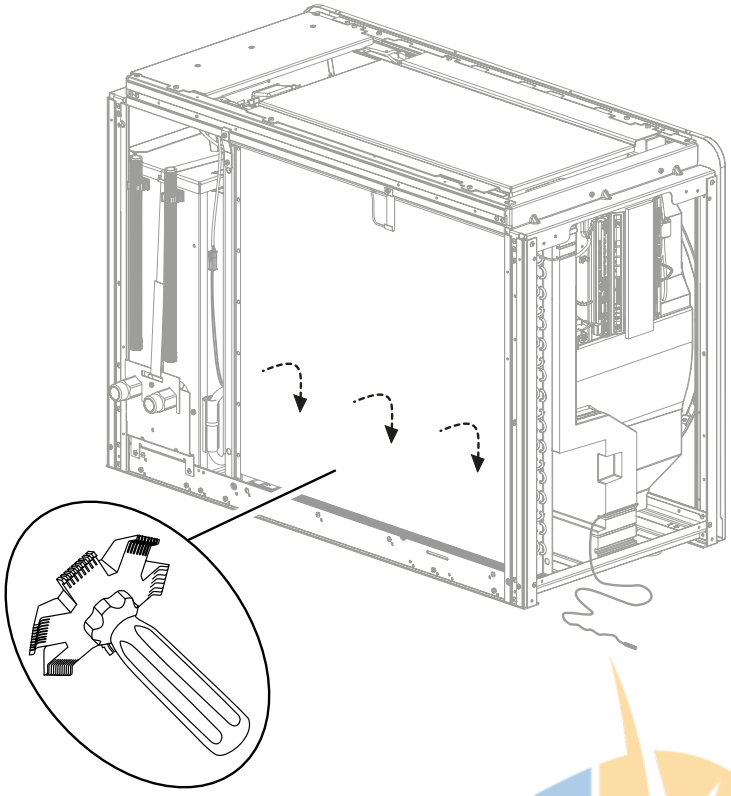

Step 15. If the evaporator fins are bent, then straighten them with a fin comb.
Step 16. Reassemble in reverse order.
Step 17. Switch on the power to the appliance and create a function test of the drip tray heater.

SOLAR PLAZA
Solarsystemen und Wärmepumpen

BOSCH Compress 5800i AW12 OR-T ·erhältlich bei solarplaza.at

8 Work instructions IDU floor standing (AWM, T180, AirModule)

8.1 Software loading

The XCU boards are as spare parts delivered without firmware. The loading process is described in the following manuals:
- Installation Guide SWDL Field (Software and SWDL)
- IXXAT instruction SWDL Field (Software and SWDL)

8.2 Filling hydraulic system procedure

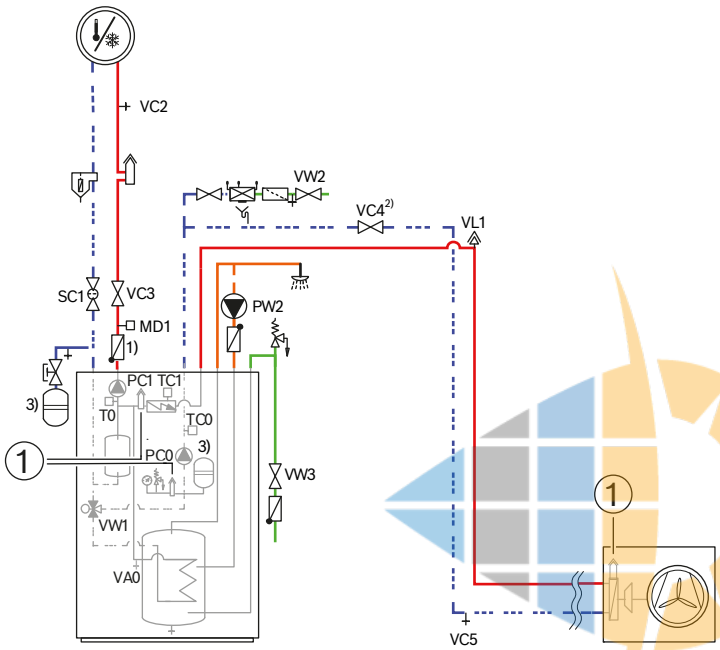

[1] Manual air vent valve

SOLAR PLAZA
Solarsystemen und Wärmepumpen

Filling the heat pump and the DHW cylinder

Step 1. Set the 3-way valve VW1 in middle position. Enter menu “3-way valve in centre pos.” and activate the function **(1)** = On.

```
Service/
   System settings/
      Heat pump/
         3-way valve in centre pos. {Yes, No}                    (1)
```

Step 2. Switch of the power to the heat pump and the indoor unit.
Step 3. Ensure that all temperature regulation valves in the heating system are fully open.
Step 4. Close the valves to the heating system, VC3 and particle filter SC1, and the valve VC4 between IDU and ODU.
Step 5. Connect a hose to the drain valve VC5 and the other end to an outlet. Open the valve.
Step 6. Open the fill valve VW2 to fill the heat pump.
Step 7. Continue filling until only water comes out of the hose by the drain and there are no more bubbles in the heat pump.
Step 8. Open the valve VC4.
Step 9. Close the drain valve VC5 and the fill valve VW2.
Step 10. Open the cold water valve VW3.
Step 11. Open a hot water tap to fill the DHW cylinder. Close the tap when only water is emerging.

BOSCH Compress 5800i AW12 OR-T ·erhältlich bei solarplaza.at

Filling the heating system and the micro buffer

Step 12. Move the hose to the heating system drain valve VC2.
Step 13. Open the particle filter SC1, the drain valve VC2 and the fill valve VW2 to fill the heating system.
Step 14. Continue filling until only water comes out of the hose by the drain.
Step 15. Open the valve VC3 to fill the buffer cylinder.
Step 16. Continue filling until only water comes out of the hose by the drain and there are no more bubbles in the heating system.
Step 17. Close the drain valve VC2 and remove the hose.
Step 18. Open the manual air vent valves and close them when only water is emerging.
Step 19. Continue filling until target pressure is reached at the GC1 pressure gauge.
Step 20. Close the fill valve VW2.

8.3 Circulation pump replacement

The control unit communicates with the circulation pumps via LIN bus. Each circulation pump in the installation has its own unique address for it to be identified by the control unit and assigned a role/designation (PC0, PC1) in the system. **If two circulation pumps with the same address are simultaneously connected, LIN bus communication will fail**.

When a circulation pump is procured as spare part, it is carrying a default “null” address. Two things to consider:

- When a new circulation pump is connected, the control unit will detect it but not recognize its role in the system. The installer needs to assign it a role.
- If two spare part circulation pumps are connected at once, both will have the same default null address, which breaks communication. Hence, this action is not allowed. In the unlikely event that more than one circulation pump needs to be replaced in a service intervention, connect and configure one pump at a time. In this way, a conflict between addresses is avoided.

Procedure

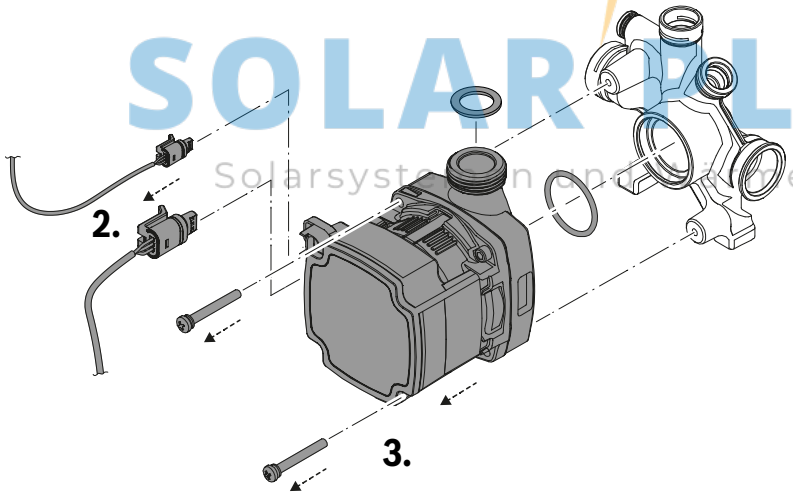

Step 1. Brake power to appliance.
Step 2. Disconnect power supply and LIN-bus for circulation pump.
Step 3. Drain the hydraulic system and replace the circulation pump.
Step 4. Refill the hydraulic system.
Step 5. Connect power supply and LIN-bus to the new circulation pump.
Step 6. Turn on power to the appliance.
Step 7. Enter the Service menu in the HMI and go to System settings, Heat pump. Select Expert view **(1)** = On, to reveal the menu LIN-bus Pumps **(2)**.

BOSCH Compress 5800i AW12 OR-T ·erhältlich bei solarplaza.at

```
Service/
   System settings/
      Heat pump/
         Expert view {On, Off}                                    (1)
         LIN-bus Pumps/                                           (2)
            PC0 connected     Yes/No
            PC1 connected     Yes/No
            More.../   (3)
               Connect to PC<x> {No, Yes}                         (4)
```

Step 8. Enter menu LIN-bus pumps **(2)**. A list of electrically attached circulation pumps are listed. A pump which is already assigned a role it is listed as “connected = Yes”. The new spare part pump with null address should be listed as “connected = No”.
Step 9. Enter the menu More... **(3)**. The system automatically detects which pump role is not assigned in the system. To assign the role to your new pump, PC<x>, set Connect to PC<x> **(4)** = Yes. The address/role is now stored in the new circulation pump. The replacement is complete.
Step 10. Run the de-airing routine and top up the hydraulic system if needed.

8.3.1 How to reassign role of circulation pump address

The steps described in this section are only necessary if two circulation pumps were mixed up in the configuration, that is if the physical PC0 pump was accidentally assigned the role of PC1 and vice versa, or if more than one circulation pump is assigned the same address/role, causing a conflict on the LIN bus.

```
Service/
   System settings/
      Heat pump/
         Expert view {On, Off}                                    (1)
         LIN-bus Pumps/                                           (2)
            PC0 connected     Yes/No
            PC1 connected     Yes/No
            More.../   (3)
               Connect to PC<x> {No, Yes}                         (4)
               Disconnect connection with PC<x> {No, Yes}         (5)
```

Step 1. Brake power to appliance.
Step 2. Keep only one pump connected and disconnect the other.
Step 3. Turn on power to the appliance.
Step 4. Enter menu LIN-bus Pumps **(2)**. There should be one circulation pump in the list. Check its designation (PC0, PC1). If it is correct, repeat work sequence from step 1 but disconnect the current circulation pump and connect the other. Repeat until you find a pump with the incorrect role/designation. If the designation is incorrect, go to step 5.
Step 5. Enter menu More... **(3)**.
Step 6. Select Disconnect connection with PC<x> **(5)** = Yes, where <x> is the “bad” pump number. The role is removed from the pump which is assigned a null address.
Step 7. Select Connect to PC<x> **(4)** = Yes, where <x> is the correct number for the circulation pump. The pump is assigned the corresponding role.
Step 8. If more pumps need to be checked, repeat work sequence from step 1. Remember to connect and configure only one pump at a time. If you have already made the necessary corrections, move on to step 9.
Step 9. Brake power to appliance.
Step 10. Connect the other circulation pump. (There should no longer be conflicting addresses on the LIN bus.)
Step 11. Turn on power to the appliance.

8.4 Manual de-airing

To remove air in the system, air venting mode can be activated manually from the HMI.

```
Service/
   System settings/
      Heat pump/
```


BOSCH Compress 5800i AW12 OR-T ·erhältlich bei solarplaza.at

```
Air-purge mode {On, Off}                                    (1)
```

When **(1)** = On, the pumps, the 3-way valve and the cooling contact PK2 are operated in a predefined sequence.

	15 s	15 s	15 s	15 s	15 s	15 s
PC1	On	On	On	Off	Off	Off
PC0 (100%)	On	On	Off	On	On	Off
VW1	Off (heating)	Off (heating)	Off (heating)	Off (heating)	On (DHW)	On (DHW)
PK2	Off	On	Off	Off	Off	Off

The sequence is repeated until it is deactivated by setting **(1)** = Off. Air-purge mode times out automatically after 60 minutes.

8.5 DHW tank replacement

In case of DHW tank leakage, the whole IDU must be replaced. Decision taken that the DHW tank is not a spare part.

SOLAR PLAZA
Solarsystemen und Wärmepumpen

BOSCH Compress 5800i AW12 OR-T ·erhältlich bei solarplaza.at

8.6 Electrical heater [EE] replacement

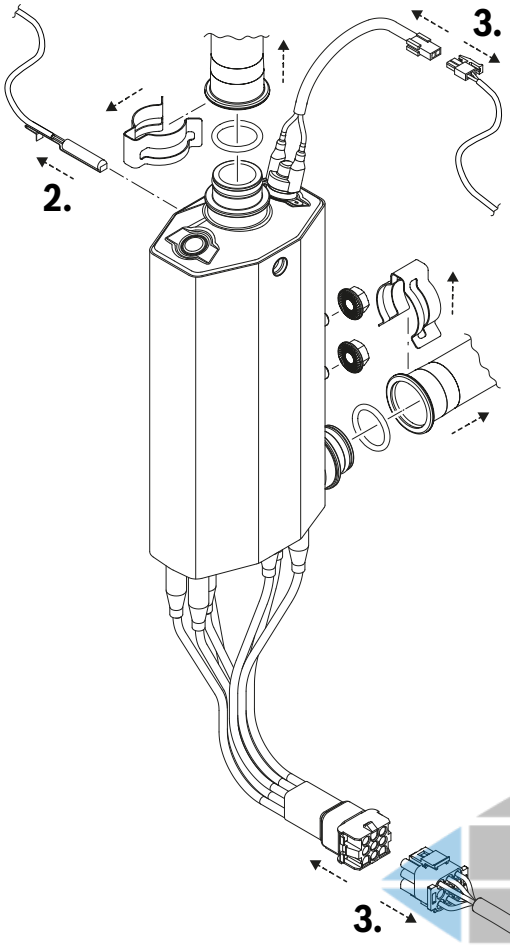

Step 1. Switch off the power to the appliance.
Step 2. Pull out the holder together with the temperature sensor.
Step 3. Disconnect the power supply cable and the overheat protection cable.
Step 4. Drain the hydraulic system.

SOLAR PLAZA
Solarsysteme und Wärmepumpen

Be aware of splashing water, approx. 1 litre of water is still in the electrical heater and piping after draining.

Step 5. Remove the electrical heater.
Step 6. Reassemble in reverse order.

NOTICE

Risk of damage to the contacts!

- Ensure that the electrical heater cable contacts are correct connected to each other at installation. The contacts must be completely together without any gaps.

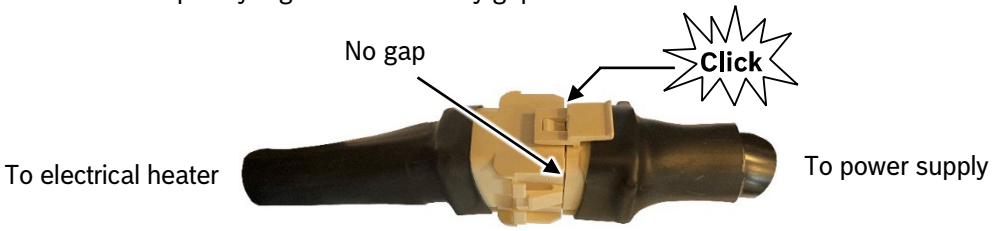

BOSCH Compress 5800i AW12 OR-T ·erhältlich bei solarplaza.at

8.7 Temperature sensor [TC1] replacement

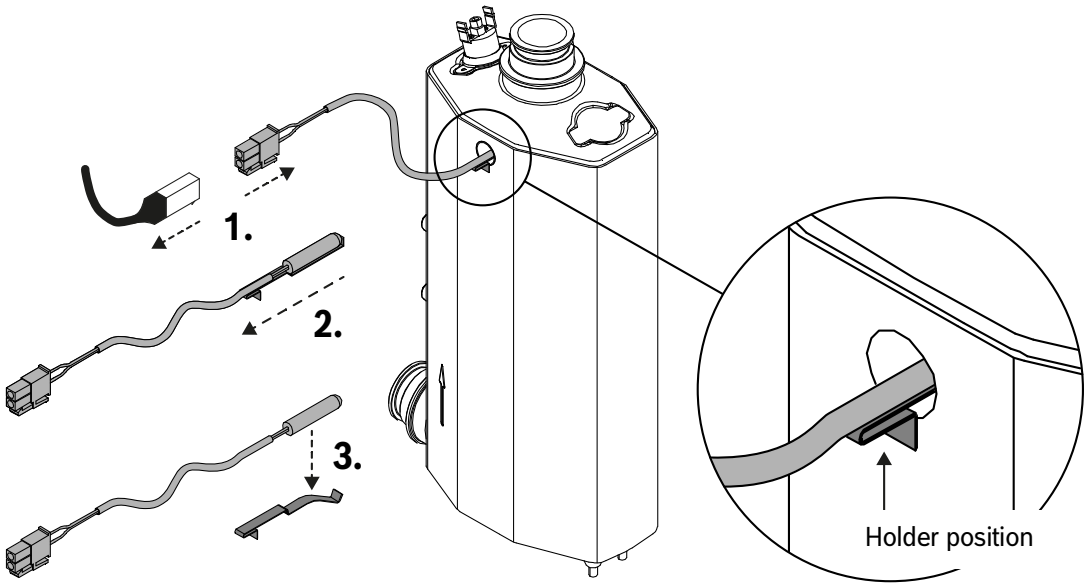

Step 1. Disconnect the sensor cable.
Step 2. Pull out the holder together with the sensor.
Step 3. Replace the sensor.
Step 4. Reassemble in reverse order. Ensure that the holder is pushed all the way into the electrical heater (see the above image for reference).

SOLAR PLAZA
Solarsystemen und Wärmepumpen

BOSCH Compress 5800i AW12 OR-T ·erhältlich bei solarplaza.at

8.8 3-way valve [VW1] replacement

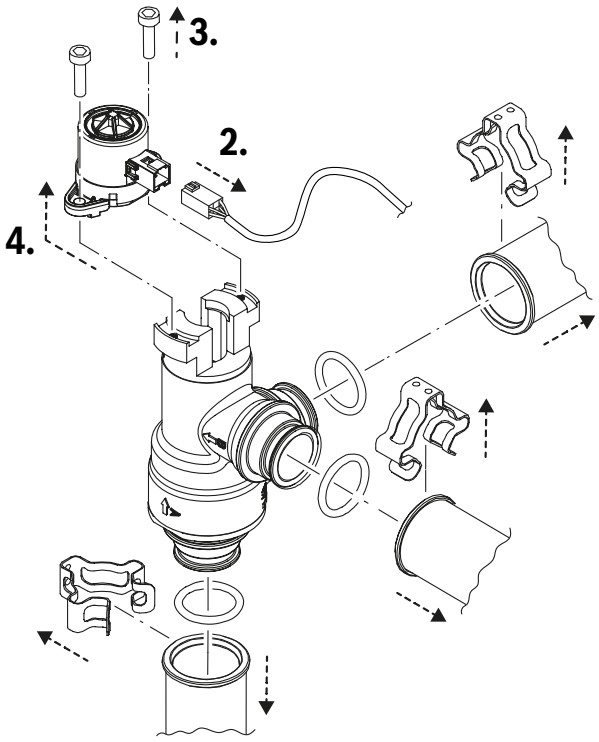

Step 1. Switch off the power to the appliance.
Step 2. Disconnect the motor cable.
Step 3. Remove the screws.
Step 4. Remove the motor.
Step 5. Drain the hydraulic system.
Step 6. Remove the valve.
Step 7. Reassemble in reverse order.

SOLAR PLAZA
Solarsystemen und Wärmepumpen

BOSCH Compress 5800i AW12 OR-T ·erhältlich bei solarplaza.at

9 Work instructions IDU wall hung (AWE, E, AirBox)

9.1 Software loading

Same instruction as for the IDU floor standing (AWM, T180, AirModule) (see section 8.1 Software loading).

9.2 Filling procedure hydraulic system

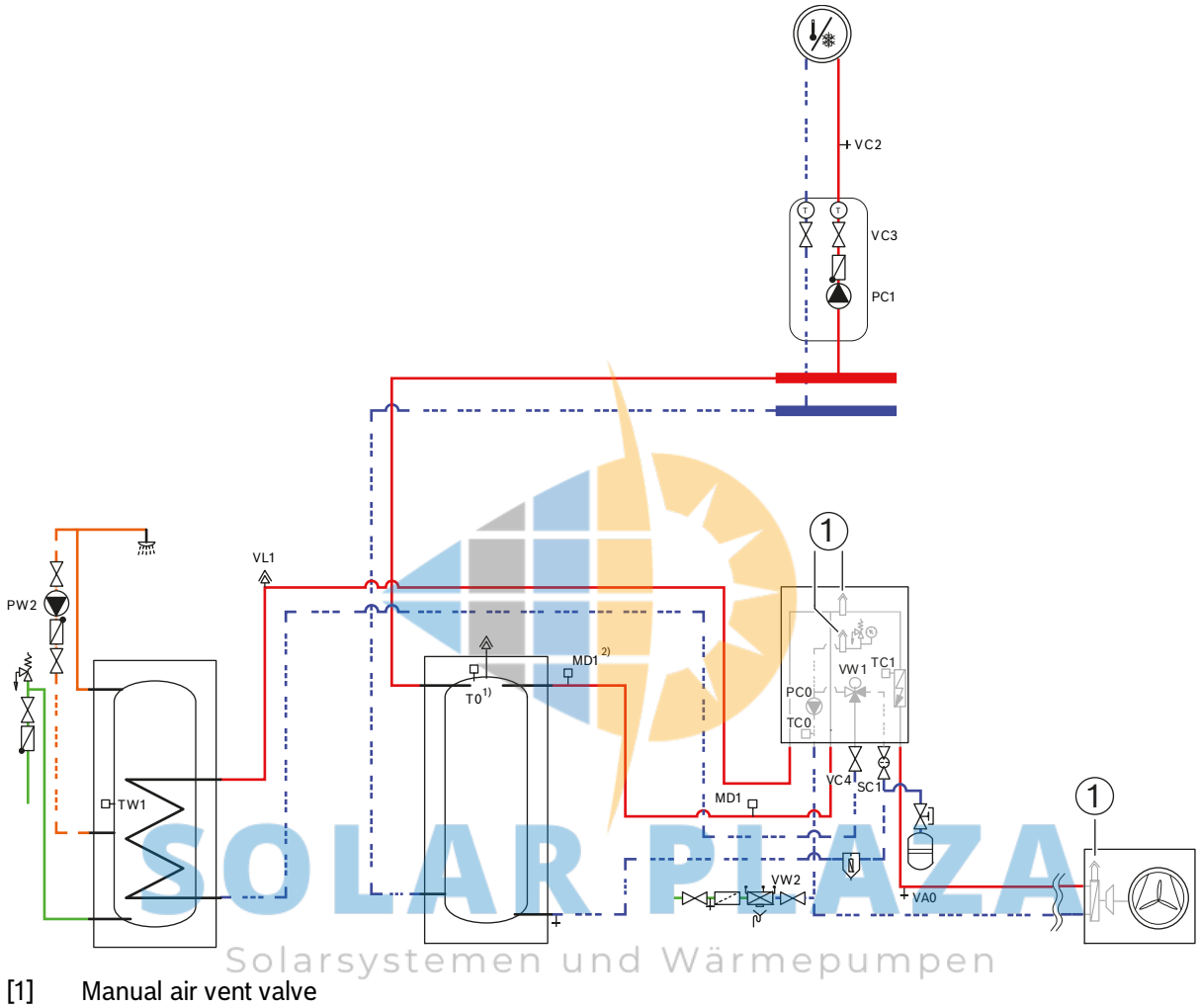

SOLAR PLAZA
Solarsystemen und Wärmepumpen

[1] Manual air vent valve

Filling the heat pump and the DHW cylinder

Step 1. Set the 3-way valve VW1 in middle position. Activate the function “3-way valve in centre pos.” **(1)** = Yes.

```
Service/
   System settings/
      Heat pump/
         3-way valve in centre pos. {Yes, No}                    (1)
```

Step 2. Switch off the power to the heat pump and the indoor unit.
Step 3. Ensure that all temperature regulation valves in the heating system are fully open.
Step 4. Close the valves to the heating system VC3 and particle filter SC1 and the valve to the DHW cylinder VC4.
Step 5. Connect a hose to the drain valve VA0 and the other end to an outlet. Open the valve.
Step 6. Open the fill valve VW2 to fill the heat pump.

BOSCH Compress 5800i AW12 OR-T ·erhältlich bei solarplaza.at

Step 7. Continue filling until only water comes out of the hose by the drain and there are no more bubbles in the heat pump.
Step 8. Close the drain valve VA0 and the fill valve VW2.
Step 9. Open the cold water valve VW3.
Step 10. Open a hot water tap to fill the DHW cylinder. Close the tap when only water is emerging.

Filling the heating system

Step 11. Move the hose to the heating system drain valve VC2.
Step 12. Open the particle filter SC1, the valve to the DHW cylinder VC4, the drain valve VC2 and the fill valve VW2 to fill the heating system.
Step 13. Continue filling until only water comes out of the hose by the drain and there are no more bubbles in the heating system.
Step 14. Open the valve VC3.
Step 15. Close the drain valve VC2 and remove the hose.
Step 16. Open the manual air vent valves and close them when only water is emerging.
Step 17. Continue filling until target pressure is reached at the GC1 pressure gauge.
Step 18. Close the fill valve VW2.

9.3 Circulation pump replacement

Same instruction as for the IDU floor standing (AWM, T180, AirModule) (see section 8.3 Circulation pump replacement).

9.4 Manual de-airing

Same instruction as for the IDU floor standing (AWM, T180, AirModule) (see section 8.4 Manual de-airing).

9.5 Electrical heater [EE] replacement

Same instruction as for the IDU floor standing (AWM, T180, AirModule) (see section 8.6 Electrical heater [EE] replacement).

9.6 Temperature sensor [TC1] replacement

Same instruction as for the IDU floor standing (AWM, T180, AirModule) (see section 8.7 Temperature sensor [TC1] replacement).

SOLAR PLAZA
Solarsystemen und Wärmepumpen

9.7 3-way valve [VW1] replacement

Same instruction as for the IDU floor standing (AWM, T180, AirModule) (see section 8.8 3-way valve [VW1] replacement).

BOSCH Compress 5800i AW12 OR-T ·erhältlich bei solarplaza.at

10 Work instructions IDU floor standing (AWMB, TP70, AirModule B)

10.1 Software loading

Same instruction as for the IDU floor standing (AWM, T180, AirModule) (see section 8.1 Software loading).

10.2 Filling procedure hydraulic system

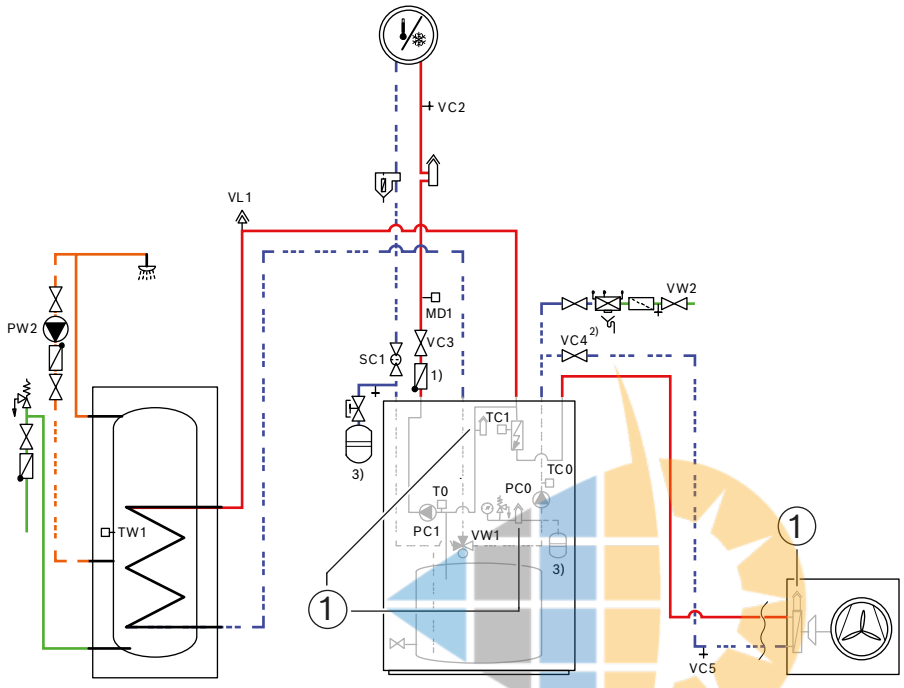

[1] Manual air vent valve

Filling the heat pump

Step 1. Set the 3-way valve VW1 in middle position. Activate the function “3-way valve in centre pos.” **(1)** = Yes.

SOLAR PLAZA
Solarsystemen und Wärmepumpen

```
Service/
   System settings/
      Heat pump/
         3-way valve in centre pos. {Yes, No}                    (1)
```

Step 2. Switch off the power to the heat pump and the indoor unit.
Step 3. Ensure that all temperature regulation valves in the heating system are fully open.
Step 4. Close the shut off valve VC3 and the particle filter SC1.
Step 5. Connect a hose to drain valve VC5 and the other end to an outlet.
Step 6. Open the drain valve VC5.
Step 7. Close the shut off valve VC4.
Step 8. Open the fill valve VW2 to fill the heat pump. Continue filling until only water, without bubbles, comes out of the hose by the drain valve VC5.
Step 9. Close the drain valve VC5 and the fill valve VW2.
Step 10. Open the shut off valve VC4.

BOSCH Compress 5800i AW12 OR-T ·erhältlich bei solarplaza.at

Filling the heating system

Step 11. Move the hose to the heating system drain valve VC2.
Step 12. Open the drain valve VC2.
Step 13. Open the shut off valve VC3 and the fill valve VW2. Continue filling until only water, without bubbles, comes out.
Step 14. Open the particle filter SC1 and close the shut off valve VC3.
Step 15. Close the drain valve VC2.
Step 16. Open the shut off valve VC3.
Step 17. Open the manual air vent valve installed in the heating system and close it when only water is emerging.
Step 18. Continue filling until target pressure is reached at the GC1 pressure gauge.
Step 19. Close the fill valve VW2.

10.3 Circulation pump replacement

Same instruction as for the IDU floor standing (AWM, T180, AirModule) (see section 8.3 Circulation pump replacement).

10.4 Manual de-airing

Same instruction as for the IDU floor standing (AWM, T180, AirModule) (see section 8.4 Manual de-airing).

10.5 Electrical heater [EE] replacement

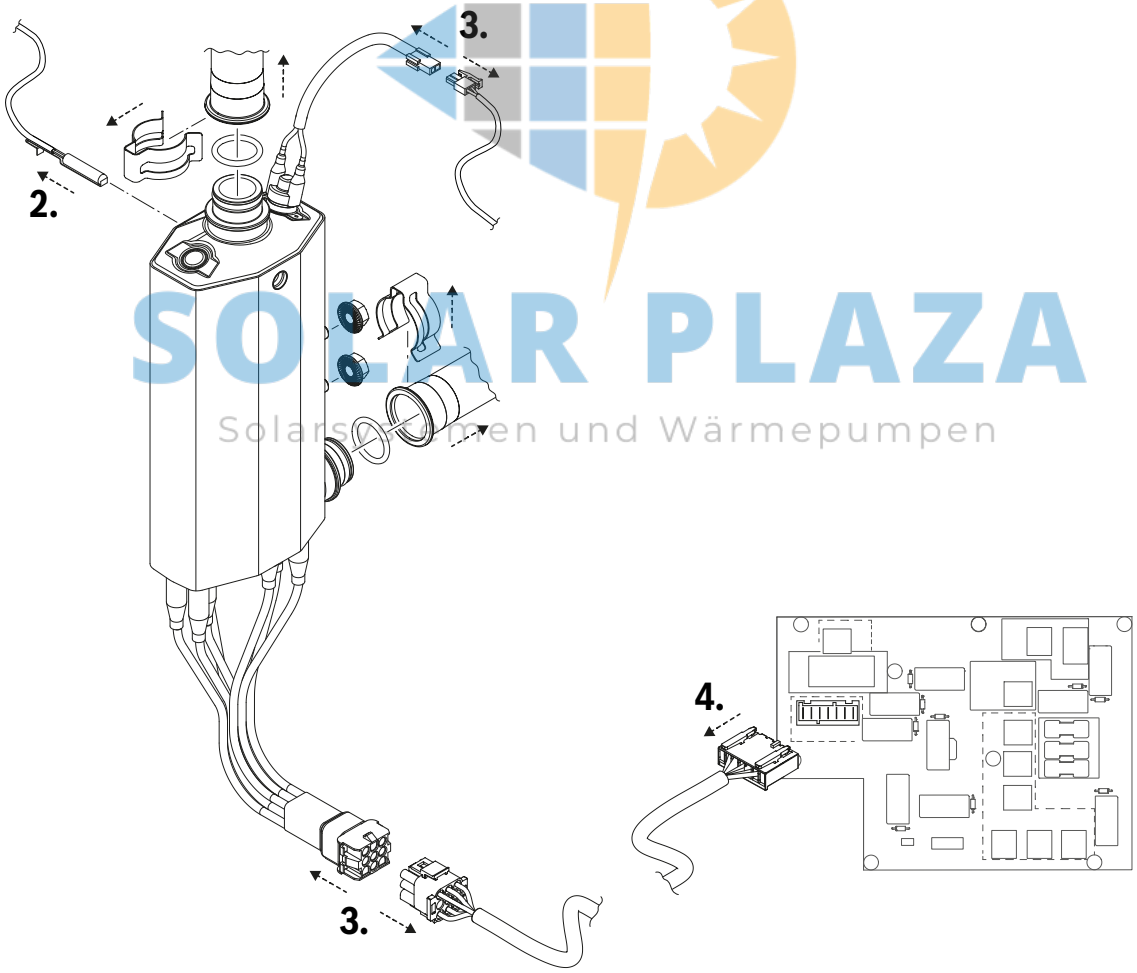

Step 1. Switch off the power to the appliance.
Step 2. Pull out the holder together with the temperature sensor.

SOLAR PLAZA
Solarsysteme und Wärmepumpen

BOSCH Compress 5800i AW12 OR-T ·erhältlich bei solarplaza.at

Step 3. Disconnect the power supply cable and the overheat protection cable.
Step 4. If necessary, disconnect the electrical heater cable contact from the control board.
Step 5. Drain the hydraulic system.

Be aware of splashing water, approx. 1 litre of water is still in the electrical heater and piping after draining.

Step 6. Remove the electrical heater.
Step 7. Reassemble in reverse order.

NOTICE

Risk of damage to the control board and contacts!

- Ensure that the electrical heater cable contact is correct connected to the control board at installation. The contact must be completely pushed in without any gaps.

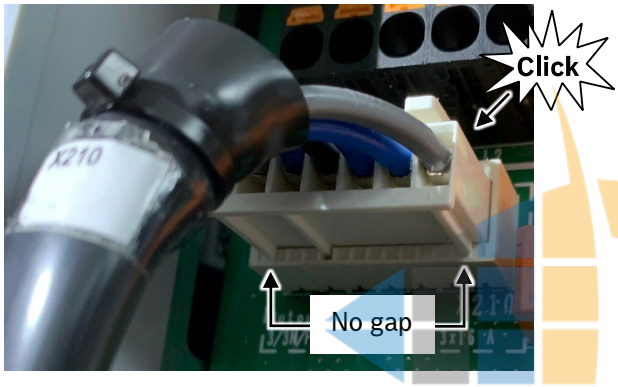

- Ensure that the electrical heater cable contacts are correct connected to each other at installation. The contacts must be completely together without any gaps.

SOLAR PLAZA
Solarsysteme und Wärmepumpen

10.6 Temperature sensor [TC1] replacement

Same instruction as for the IDU floor standing (AWM, T180, AirModule) (see section 8.7 Temperature sensor [TC1] replacement).

10.7 3-way valve [VW1] replacement

Same instruction as for the IDU floor standing (AWM, T180, AirModule) (see section 8.8 3-way valve [VW1] replacement).

BOSCH Compress 5800i AW12 OR-T ·erhältlich bei solarplaza.at

10.8 Control board [XCU-SEH] replacement

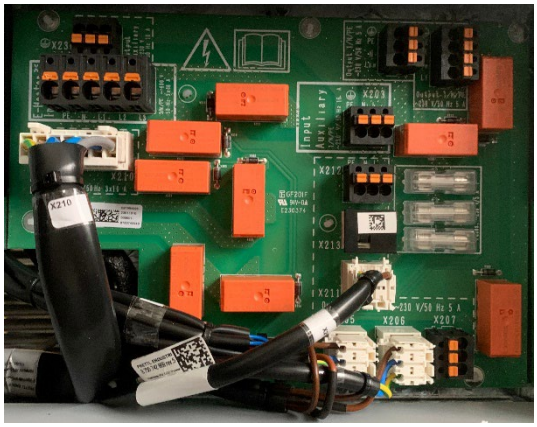

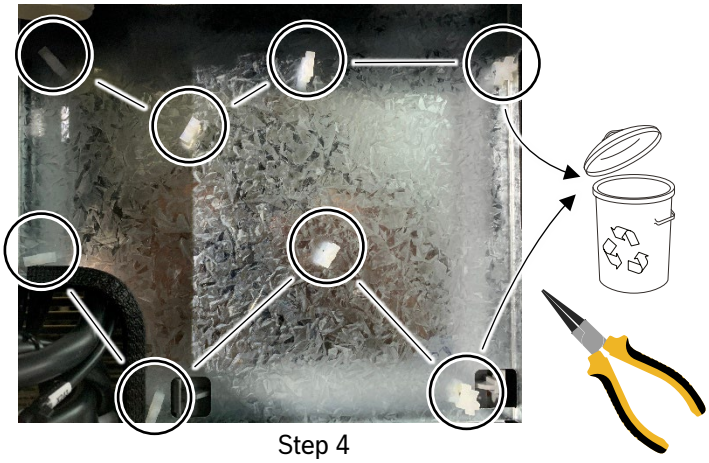

Step 1. Switch off the power to the appliance.
Step 2. Remove the cables from the control board.
Step 3. Remove the control board.
Step 4. Remove the 8 plastic spacers with a long nose pliers.
Step 5. Reassemble in reverse order.

New plastic spacers delivered together with the control board must always be used at installation.

SOLAR PLAZA
Solarsystemen und Wärmepumpen

NOTICE

Risk of damage to the control board and contact!

- Ensure that the electrical heater cable contact is correct connected to the control board at installation. The contact must be completely pushed in without any gaps.

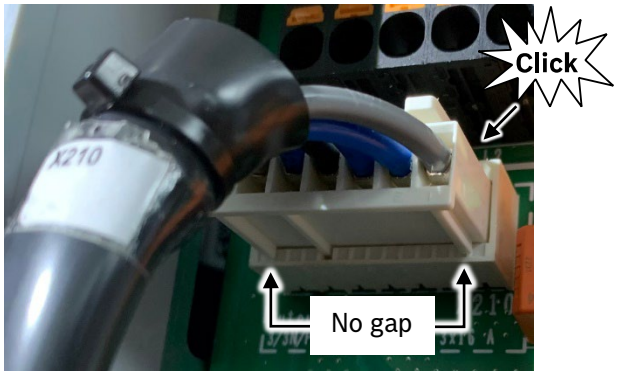

BOSCH Compress 5800i AW12 OR-T ·erhältlich bei solarplaza.at